PRODUCT GUIDE

AIR POWERED PUMP TECHNOLOGY MANUFACTURED IN JAPAN

yamada

ABOUT YAMADA...

Yamada Europe B.V.
Aquamarijnstraat 50
7554 NS Hengelo
The Netherlands

Phone +31 (0)74-242 2032
Fax +31 (0)74-242 1055

E-mail: sales@yamada-europe.com
Web: www.yamada-europe.com

CONTENTS

Yamada Corporation has been a leading producer of industrial equipment since 1905, and for pneumatic pumps for over 77 years. As a leader in pneumatic pumping technology, Yamada is known in many industries worldwide for its innovative products, superior quality and unmatched reliability. Yamada has an impressive history of delivering new products and solving customer problems which confirm Yamada's position as the industry leader.

Yamada's reputation for manufacturing top quality products, allied with continuing efforts in research and development have created a strong foundation for market leadership. As an ISO 9001 certified corporation, stringent quality procedures are followed throughout the manufacturing process, including liquid testing of every pump prior to shipping.

Yamada Corporation has its primary headquarters in Tokyo, Japan, with manufacturing based in Sagamihara City. Assembly facilities are located in Chicago, Illinois, USA and Hengelo, The Netherlands; an office in Thailand; and Shanghai is covering the emerging markets of China. These offices are supportcenters for over 400 Yamada distributors worldwide.

Yamada Europe B.V., a wholly owned subsidiary of Yamada Corporation, was established in 1986 to provide sales and service and support for Europe, the Middle East and Africa, through a highly trained network of distributors.

Our professional staff provides:
- Customer service
- Product training
- Research & development
- Parts and service for all Yamada pumps
- Application engineering
- Industry knowledge

With a wide customer network, Yamada is in position to service the global market needs worldwide. Contact Yamada Europe for the closest distributor location.

We build our pumps with quality and innovation. This is the cornerstone of the Yamada design and manufacturing process.

For additional information, product literature, and drawings please visit www.yamada-europe.com or contact our sales team at +31 (0)74-24 220 32.

Engineered to Perform 4
Air Valve Technology 5
Ten Features of a Yamada Diaphragm Pump 6
Understanding Performance Curves 6
NDP-5 Series Pumps 7
DP-10/15 Series Pumps 8
NDP-10/15 Series Pumps 10
NDP-20 Series Pumps 12
NDP-25 Series Pumps 14
NDP-40 Series Pumps 16
NDP-50 Series Pumps 18
NDP-80 Series Pumps 20
Dimensional Drawings 22
High Pressure 2:1 Pumps 26
Manifold Options 26
XDP Series Pumps 27
Powder Series Pumps 27
Drum Series Pumps 28
NDP-32 Serie Pump 28
FDA Compliant Pumps 29
DM(B)(X) Series Pumps 29
Solids Handling Pump 30
Liquid Level Controller 31
Dry-Run Detection 31
Pulsation Dampeners 32
Pump Diaphragms 33
Maximum Liquid Temperature 33
Optional Coatings 34
Installation 34
Additional Options 35

ENGINEERED TO PERFORM

Fully bolted leak free mating surfaces
All Yamada pumps incorporate registered fit bolted construction, which simplifies reassembly after maintenance. No leak-prone clamp bands are utilized.

One air valve fits all
The NDP-40, 50 & 80 series pumps utilize one common air valve assembly, reducing parts inventory and assembly confusion. The NDP-20 & 25 have a common air valve as well. One air valve concept is used in all Yamada NDP series pumps!

Outside accessible
Inspection or maintenance of every Yamada air valve can be performed without removing the pump from service.

Pilot valve
Unique design is an individual modular pilot valve that actuates the air valve. It is maintenance- free, with no cumbersome snap rings or lubricated dynamic o-rings to replace or repair.

Diaphragm dynamics
Extensive research has led to the development of an optimal stroke length that maximizes diaphragm life and performance while minimizing downtime and maintenance costs.

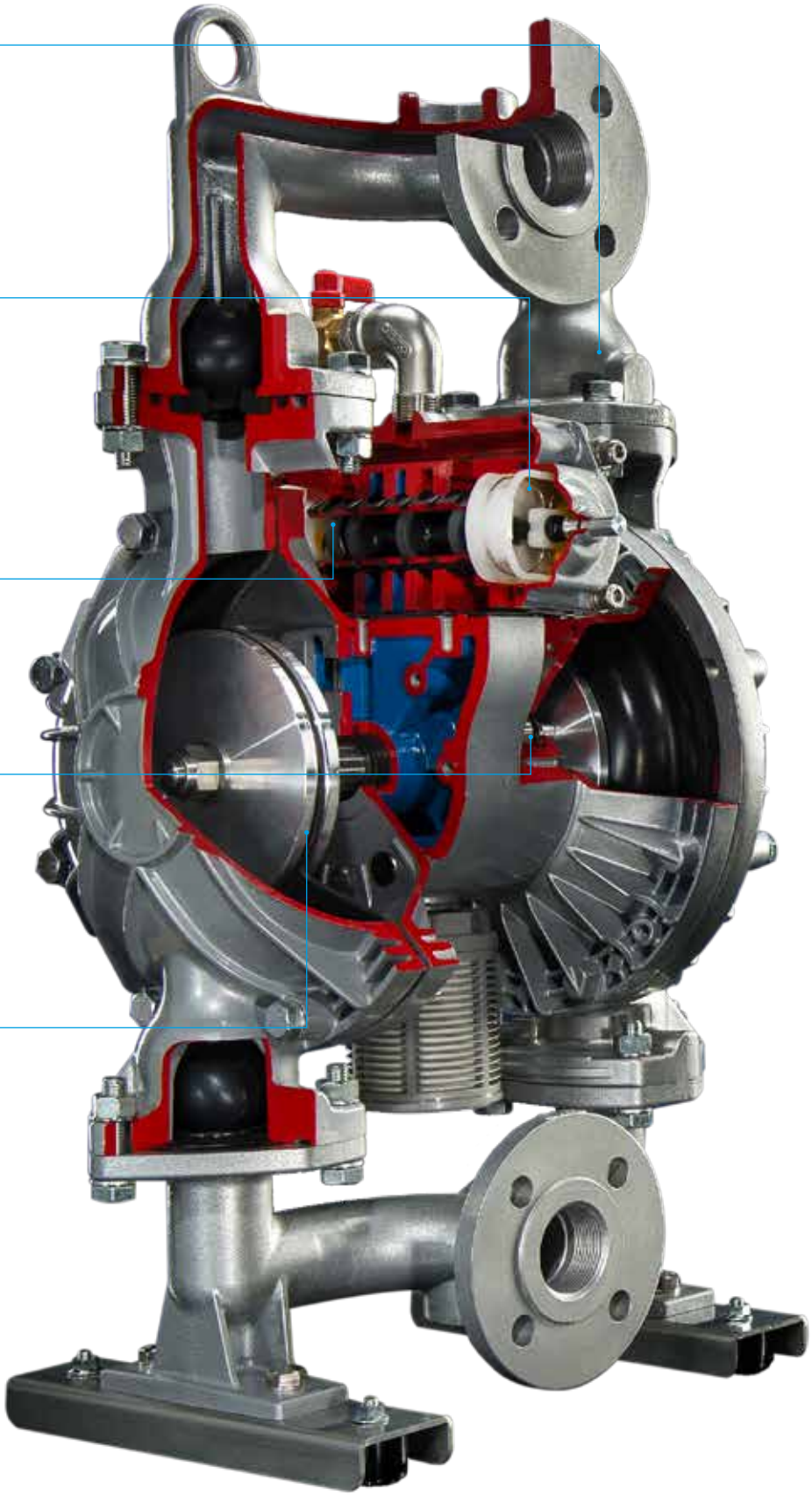

BUILT TO LAST

AIR VALVE TECHNOLOGY

Air valve technology is the heart of the air-powered double diaphragm pump and determines reliability. Yamada holds three patents on its field proven valve and enjoys a superior reputation throughout the industry.

Unified Air Valve Concept

To simplify, Yamada offers two common size air valve assemblies within five sizes of pumps (3/4" & 1" pumps and 1-1/2" 2" & 3" pumps) further reducing reassembly confusion and parts inventory. We try to unify to reduce multiple air valve designs and revisions. Whether your pumps are functioning continuously or intermittently; at high or low pressure; using dirty or clean air; Yamada offers one field proven design.

Truly Non-Lubricated Air Valve

The patented air valve on all NDP series pumps never requires lubrication or pre-packing. The advanced design eliminates the need for external lubrication which can lead to pumpage contamination and maintenance headaches. Yamada is proud to be the originator of non-lubricated air valve technology for air-powered double diaphragm pumps.

Component Replaceable

All Yamada air valves can be restored with individual components, without requiring complete valve and housing replacement.

Non-Stalling

A patented non-centering, spring-assisted shifter is incorporated into every NDP Series pump, ensuring a positive shift every time.

The 304 stainless steel C-springs provide exceptional durability and longevity and are tested to last over **300 million cycles!** The spring assist also aides in long dead head applications for reliable startup.

Common-size air valve assemblies reduce parts confusion.

Air Valve fits
NDP–20 (3/4")
NDP–25 (1")
Series Pumps

Air Valve fits
NDP–40 (1-1/2")
NDP–50 (2")
NDP–80 (3")
Series Pumps

For additional information on Yamada products and services, visit www.yamada-europe.com

TEN FEATURES OF A YAMADA DIAPHRAGM PUMP

1. Handles a wide variety of fluids with high solids content: No close fitting or rotating parts so liquid with high solids content and/or size can be easily pumped.
2. Self Priming: The Yamada pump design (incorporating internal check valves) allows for high suction lift even at dry start-up and with heavier fluids.
3. Ability to run dry: No close fittings or sliding parts are at risk–the pump can run dry without damage.
4. Variable flow rate and discharge pressure: Yamada pumps will run at any setting within their operating range simply by adjusting the air inlet pressure and system conditions. One pump can fit a broad spectrum of applications.
5. Portable/Simple Installation: Yamada pumps transport easily to the application site. Simply connect your air supply line and liquid lines; the pump is ready to perform. There are no complex controls to install and operate.
6. Dead Head: Because the discharge pressure can never exceed air inlet pressure, the discharge line can be closed with no damage or wear. The pump will simply slow down and stop.
7. Shear Sensitive: The gentle nature and minimal parts contact with the liquid makes Yamada pumps an excellent choice for shear sensitive fluids.
8. Explosion Proof: Yamada pumps are operated by compressed air, therefore, they are intrinsically safe.
9. Submersible: If external components are compatible–Yamada pumps can be submerged in the liquid by simply running the exhaust line above the liquid level.
10. Pumping efficiency remains constant: There are no rotors, gears, or pistons, which wear over time and lead to the gradual decline in performance/flow rate.

For additional information on Yamada products & services, visit www.yamada-europe.com.

UNDERSTANDING PERFORMANCE CURVES

To determine compressed air requirements and proper size for a Yamada Air-powered Double Diaphragm Pump, two elements of information are required:

1. Required Flow Rate (l/min or GPM)
2 Total Dynamic Head (back pressure)
   10 m water height is 1 Bar (0,1 MPa) back pressure.

As an example, consider an NDP-40 Series Pump with rubber diaphragms performance curve. Pump pumping at 250 l/min (66 GPM) (|) at 10 m (33 Feet) (—) back pressure.
Point "•" on the performance curve is where the desired Flow Rate (l/min or GPM) and Total Dynamic Head points intersect. This point determines compressed air requirements for the particular pump.

At performance point "•", the pump will require approximately 3 Bar (0,3MPa or 45 PSI) air inlet pressure.
To arrive at this figure, follow the solid curve (—) to the left to read the air pressure rating in MPa.
By looking at the dashed line (·····), it is determined the pump will require approximately 1500 l/min of air volume.

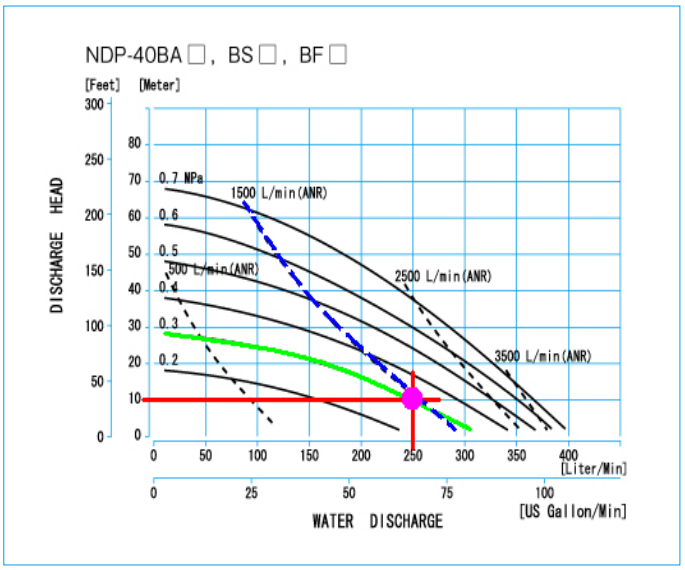

0,1 MPa	= 1 Bar
1 Bar	= 14,5 PSI
1 l	= 0,26 Gallon (gal.)
1 m	= 3,28 Feet (ft.)
1 m^3/h	= 0,58 SCFM
1000 l/min	= 34 SCFM (Standard Cubic Feet Per Minute)

NDP-5 SERIES

Maximum Capacity 11,7 l/min (3,1 GPM)
Port Size 1/4" (5 mm)

NDP-5 Polypropylene
Dimensions:
156 mm W x 152 mm H
Net Wt.: 1,36 kg
Shipping Wt.: 1,81 kg

NDP-5 Groundable Kynar®
Dimensions:
156 mm W x 152 mm H
Net Wt.: 1,67 kg
Shipping Wt.: 2,1 kg

NDP-5 Groundable Acetal
Dimensions:
156 mm W x 152 mm H
Net Wt.: 1,67 kg
Shipping Wt.: 2,1 kg

NDP-5 Stainless Steel
Dimensions:
155 mm W x 149 mm H
Net Wt.: 2,68 kg
Shipping Wt.: 3,1 kg

NDP-5 Aluminum
Dimensions:
155 mm W x 149 mm H
Net Wt.: 1,5 kg
Shipping Wt.: 1,9 kg

NDP-5 SPECIFICATIONS

Port Dimensions

Intake & discharge connection:	1/4" 5 mm Female Rc
Air inlet (incl. ball valve):	1/4" 5 mm Female Rc
Air exhaust (internal silencer):	3/8" 10 mm Female Rc

Air Supply Pressure (All Models)
1,4 – 7 Bar (0,14 – 0,7 MPa)

Discharge Volume Per Cycle
29 cc

Maximum Cycles Per Minute: 400

Maximum Dry Suction Lift: 1,5 m

Air Motor
Standard: Ryton® air motor

Model Number Nomenclature

Polypropylene (PPG)	NDP-5FPT
Groundable Kynar® (PVDF)	NDP-5FVT
Groundable Acetal (POM)	NDP-5FDT
Aluminum (ADC-12)	NDP-5FAT
Stainless Steel (316)	NDP-5FST

NDP-5 serie Performance Curve

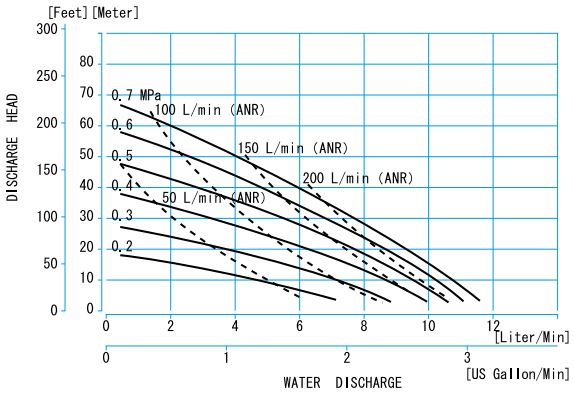

DP-10 SERIES / DP-15 SERIES

Maximum Capacity 22 l/min
Port Size 3/8" (10 mm)

Maximum Capacity 28 l/min
Port Size 1/2" (15 mm)

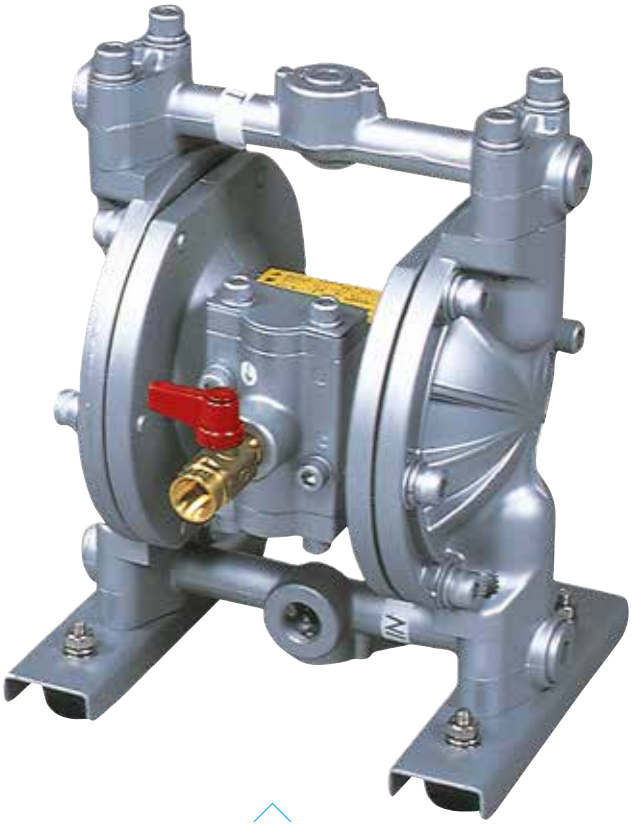

DP-10 Aluminum
Dimensions:
186 mm W x 241 mm H
Net Wt.: 3,6 kg
Shipping Wt.: 4, 5 kg

DP-10 Polypropylene
Dimensions:
196 mm W x 196 mm H
Net Wt.: 3,1 kg
Shipping Wt.: 4,0 kg

DP-15 Polypropylene
Dimensions:
246 mm W x 297 mm H
Net Wt.: 4,0 kg
Shipping Wt.: 5,4 kg

DP-10 Stainless Steel
Dimensions:
186 mm W x 241 H
Net Wt.: 5,3 kg
Shipping Wt.: 6,2 kg

DP-10 / DP-15 SERIES SPECIFICATIONS

DP-10 Port Dimensions

Intake & discharge connection:	
Polypropylene (PPG)	3/8" 10 mm Female Rc
Aluminum (ADC-12)	3/8" 10 mm Female Rc
Stainless Steel (316)	3/8" 10 mm Female Rc

DP-15 Port Dimensions

Intake & discharge connection:	
Polypropylene (PPG)	1/2" 15 mm Female Rc
Groundable Acetal (POM)	1/2" 15 mm Female Rc

Air Inlet/Exhaust

Air inlet (incl. ball valve):	1/4" 5 mm Female Rc
Air exhaust (incl. silencer):	3/8" 10 mm Female Rc

Air Supply Pressure (All Models)

1,4 – 7 Bar (0,14 – 0,7 MPa)

Discharge Volume Per Cycle

DP-10: 76 cc
DP-15: 93 cc

Maximum Cycles Per Minute

All diaphragms: 300

Maximum Size Solid

1,0 mm (1/32")

Maximum Dry Suction Lift

All diaphragms: 3 m

Air Motors

Standard: Aluminum
Optional: Teflon®-coated, or Electroless Nickel Plate

Notes:
Hytrel®-fitted pumps include Buna-N wetted o-rings.
Santoprene®-fitted pumps include EPDM wetted o-rings.

DP-10 Series Performance Curve

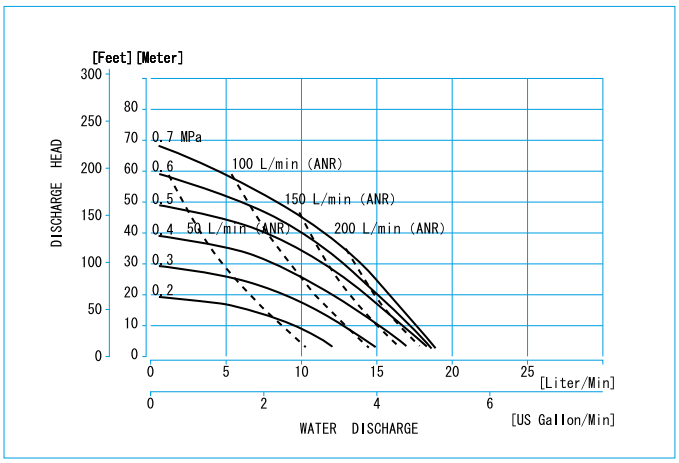

DP-15 Series Performance Curve

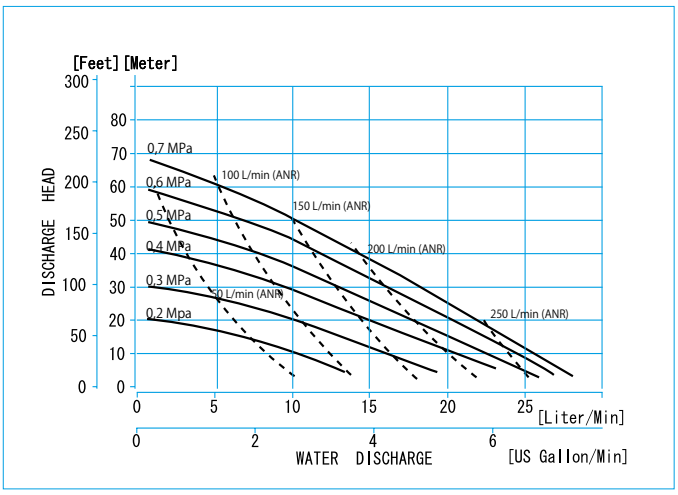

Model Number Nomenclature

DP-1X X X X

Series:
DP-10 pump or
DP-15 pump

Valve Type:
B = Ball
F = Flat

Body Material:
P = Polypropylene
A = Aluminum
S = Stainless Steel

Diaphragm Material:
C = Neoprene (CR)
N = Buna N (NBR)
S = Santoprene® (TPO)
T = Teflon® (PTFE)
V = Viton® (FKM)
H = Hytrel® (TPEE)

* Ball valves optional for PPG pumps DP-15 only
Additional options listed on page 35.

NDP-10 SERIES / NDP-15 SERIES

Maximum Capacity 22 l/min
Port Size 3/8" (10 mm)

Maximum Capacity 51 l/min
Port Size 1/2" (15 mm)

NDP-10 Polypropylene
Dimensions:
185 mm W x 190 mm H
Net Wt.: 2,74 kg
Shipping Wt.: 3,5 kg

NDP-15 Polypropylene
Dimensions:
220 mm W x 298 mm H
Net Wt.: 3,5 kg
Shipping Wt.: 4,3 kg

NDP-15 Groundable Kynar®
Dimensions:
220 mm W x 298 mm H
Net Wt.: 4,3 kg
Shipping Wt.: 5,0 kg

NDP-15 Aluminum
Dimensions:
220 mm W x 272 mm H
Net Wt.: 4,0 kg
Shipping Wt.: 5,0 kg

NDP-15 Stainless Steel
Dimensions:
212 mm W x 246,4 mm H
Net Wt.: 6,2 kg
Shipping Wt.: 7,0 kg

NDP-10 / NDP-15 SERIES SPECIFICATIONS

NDP-10 Port Dimensions

Intake & discharge connection:	
Polypropylene (PPG)	3/8" 10 mm Female Rc

NDP-15 Port Dimensions

Intake & discharge connection:	
Polypropylene (PPG)	1/2" 15 mm Female Rc
Groundable Kynar® (PVDF)	1/2" 15 mm Female Rc
Groundable Acetal (POM)	1/2" 15 mm Female Rc
Aluminum (ADC-12)	1/2" 15 mm Female Rc
Stainless Steel (316)	1/2" 15 mm Female Rc

Air Inlet/Exhaust

Air inlet (incl. ball valve):	1/4" 5 mm Female Rc
Air exhaust (internal silencer):	3/8" 10 mm Female Rc

Air Supply Pressure (All Models)

1,4 – 7 Bar (0,14 – 0,7 MPa)

Discharge Volume Per Cycle

NDP-10: 50 cc
NDP-15: 128 cc

Maximum Cycles Per Minute

All diaphragms: 400

Maximum Size Solid

1,0 mm (1/32")

Maximum Dry Suction Lift

NDP-10: All diaphragms: 1,5 m
NDP-15: Flat-type check valve: 2,4 m
Ball-type check valve: 1,5 m

Air Motor

Standard: Ryton® air motor

Notes:
Hytrel®-fitted pumps include Buna-N wetted o-rings.
Santoprene®-fitted pumps include EPDM wetted o-rings.
Kynar® (PVDF) pumps fitted with Santoprene®, Hytrel®, or Teflon® include Teflon® o-rings. Flat valves are standard PTFE.

NDP-10 Series Performance Curve

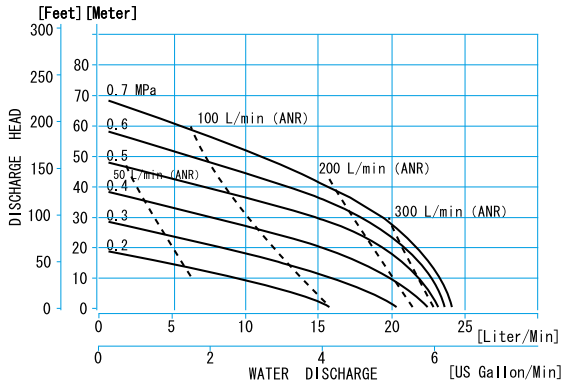

NDP-15 Series Performance Curve

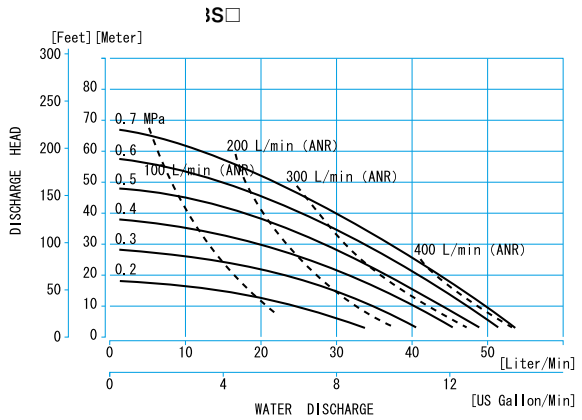

Model Number Nomenclature

NDP-1X X X X

Series:
NDP-10 pump or NDP-15 pump

Valve Type:
B = Ball*
F = Flat*

Body Material:
P = Polypropylene*
A = Aluminum
S = Stainless Steel
V = Kynar®

Diaphragm Material:
C = Neoprene (CR)
N = Buna N (NBR)
S = Santoprene® (TPO)
T = Teflon® (PTFE)
V = Viton® (FKM)
H = Hytrel® (TPEE)

* NDP-10 standard in PPG execution only
* Flat valves standard for NDP-15 Plastic pumps
* Ball valves optional for PPG pumps NDP-15 only
Additional options listed on page 35.

NDP-20 SERIES

Maximum Capacity 120 l/min
Port Size 3/4" (20 mm)

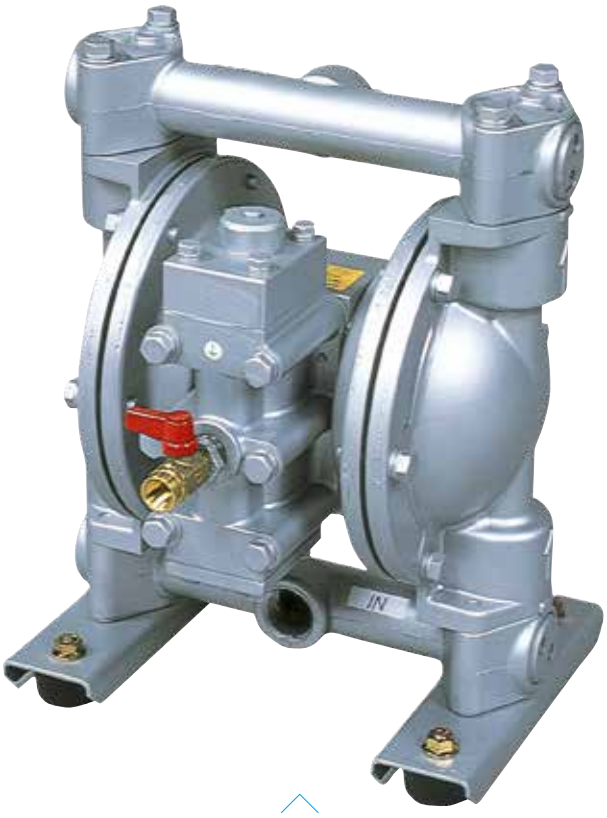

NDP-20 Aluminum
Dimensions:
249 mm W x 320 mm H
Net Wt.: 9,0 kg
Shipping Wt.: 10,4 kg

NDP-20 Polypropylene–Rc
Dimensions:
316 mm W x 368 mm H
Net Wt.: 8,2 kg
Shipping Wt.: 10,2 kg

NDP-20 Polypropylene–DN Flange
Dimensions:
316 mm W x 375 mm H
Net Wt.: 8,2 kg
Shipping Wt.: 10,2 kg

NDP-20 Stainless Steel
Dimensions:
249 mm W x 320 mm H
Net Wt.: 13,9 kg
Shipping Wt.: 14,5 kg

NDP-20 SERIES SPECIFICATIONS

Port Dimensions

Intake & discharge connection:

Polypropylene (PPG)	3/4" 20 mm Female Rc
Aluminum (ADC-12)	3/4" 20 mm Female Rc
Stainless Steel (316)	3/4" 20 mm Female Rc
Air inlet (incl. ball valve):	3/8" 10 mm Female Rc
Air exhaust (incl. silencer):	3/4" 20 mm Female Rc
DN & ANSI Flange also available—consult Yamada.	

Notes: Flange connections are equivalent to DN 20 PN 10 and JIS 10K 20A

Air Supply Pressure (All Models)

1,4 – 7 Bar (0,14 – 0,7 MPa)

Discharge Volume Per Cycle

Rubber diaphragm: 615 cc
PTFE diaphragm: 539 cc

Maximum Cycles Per Minute

Rubber diaphragm: 195
PTFE diaphragm: 195

Maximum Size Solid

2,0 mm (1/16")

Maximum Dry Suction Lift

Rubber-fitted pump capability: 5,5 m

Air Motors

Metal pumps standard with aluminum motor.
Plastic pumps standard with PPG motor.
Optional air motors: Teflon®-coated, Electroless Nickel plate for aluminum air motor.

Notes:
Hytrel®-fitted pumps include Buna-N wetted o-rings.
Santoprene®-fitted pumps include EPDM wetted o-rings.

Model Number Nomenclature

NDP-(P) 20 B X X

Series:
NDP-20 pump

Valve Type:
B = Ball

Body Material:
P = Polypropylene
A = Aluminum
S = Stainless Steel

Diaphragm Material:
C = Neoprene (CR)
N = Buna N (NBR)
E = Nordel™ (EPDM)
S = Santoprene® (TPO)
T = Teflon® (PTFE)
V = Viton® (FKM)
H = Hytrel® (TPEE)

Metal Pump Performance Curve

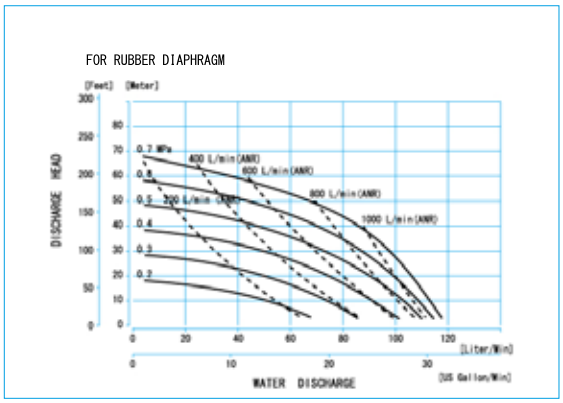

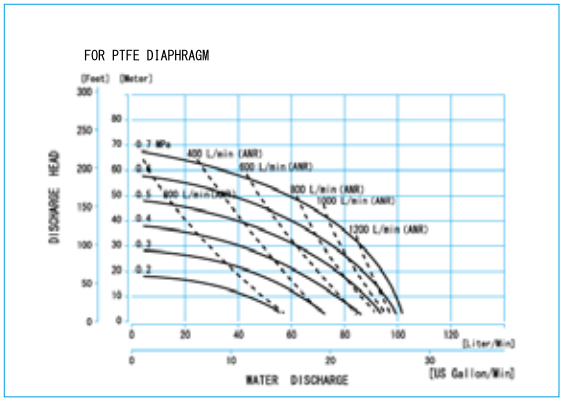

Plastic Pump Performance Curve

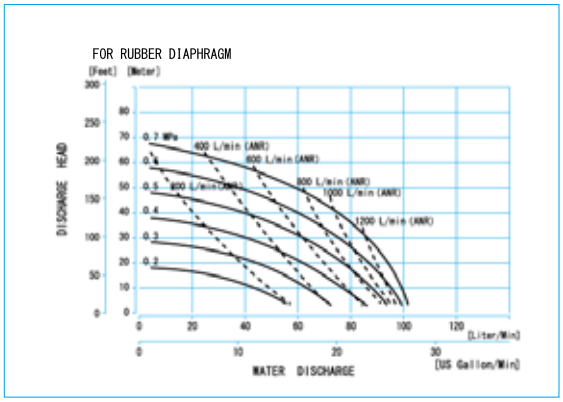

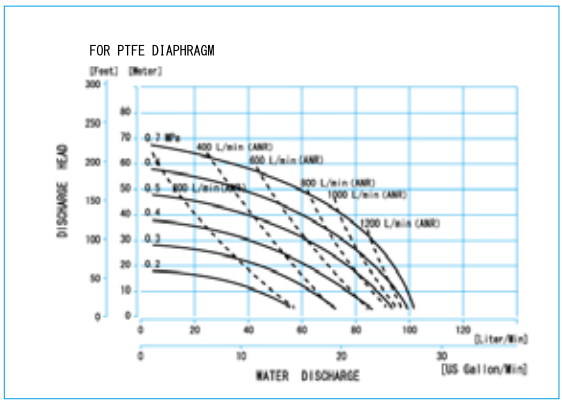

Additional options listed on page 35.

NDP-25 SERIES

Maximum Capacity 170 l/min
Port Size 1" (25 mm)

NDP-25 Polypropylene –DN Flange
Dimensions: 366 mm W x 422 mm H
Net Wt.: 10,9 kg
Shipping Wt.: 12,6 kg

NDP-25 Polypropylene –Rc
Dimensions:
366 mm W x 429 mm H
Net Wt.: 10,9 kg
Shipping Wt.: 12,6 kg

NDP-25 Groundable Kynar®-Rc
Dimensions:
366 mm W x 429 mm H
Net Wt.: 13,4 kg
Shipping Wt.: 15,0 kg

NDP-25 Groundable Kynar®-DN Flange
Dimensions:
366 mm W x 442 mm H
Net Wt.: 13,4 kg
Shipping Wt.: 15,0 kg

NDP-25 Aluminum
Dimensions: 287 mm W x 383 mm H
Net Wt.: 13,0 kg
Shipping Wt.: 14,0 kg

NDP-25 Stainless Steel
Dimensions: 287 mm W x 383 mm H
Net Wt.: 19,9 kg
Shipping Wt.: 21,0 kg

NDP-25 Cast Iron
Dimensions: 287 mm W x 383 mm H
Net Wt.: 19,9 kg
Shipping Wt.: 21,0 kg

NDP-25 SERIES SPECIFICATIONS

Port Dimensions

Intake & discharge connection:	
Polypropylene (PPG)	1" 25 mm Female Rc
Groundable Kynar® (PVDF)	1" 25 mm Female Rc
Aluminum (ADC-12)	1" 25 mm Female Rc
Stainless Steel (316)	1" 25 mm Female Rc
Cast Iron	1" 25 mm Female Rc
Air inlet (incl. ball valve):	3/8" 10 mm Female Rc
Air exhaust (incl. silencer):	3/4" 20 mm Female Rc
DN & ANSI Flange also available—consult Yamada.	

Notes: Flange connections are equivalent to DN 25 PN 10 and JIS 10K 25A

Air Supply Pressure (All Models)

1,4 – 7 Bar (0,14 – 0,7 MPa)

Discharge Volume Per Cycle

Rubber diaphragm: 833 cc
PTFE diaphragm: 787 cc

Maximum Cycles Per Minute

Rubber diaphragm: 210
PTFE diaphragm: 210

Maximum Size Solid

4,8 mm (3/16")

Maximum Dry Suction Lift

Rubber-fitted pump capability: 5,5 m

Air Motors:

Metal pumps standard with aluminium motor Plastic pumps standard with PPG motor
Optional air motors: Teflon®-coated, Electroless Nickel Plate for aluminum air motor.

Notes:
All Polypropylene, Aluminum, Cast Iron, and SS Hytrel® fitted pumps include Buna-N wetted o-rings.
Santoprene® fitted pumps include EPDM wetted o-rings. Kynar® (PVDF) pumps fitted with Santoprene® include Santoprene® check balls & PTFE o-rings, Hytrel®, or Teflon® include Teflon® check balls & o-rings.

Model Number Nomenclature

NDP-(P)25 B X X

Series:
NDP-25 pump

Valve Type:
B = Ball

Body Material:
P = Polypropylene
A = Aluminum
S = Stainless Steel
F = Cast Iron
V = Kynar®

Diaphragm Material:
C = Neoprene (CR)
N = Buna N (NBR)
E = Nordel™ (EPDM)
S = Santoprene® (TPO)
T = Teflon® (PTFE)
V = Viton® (FKM)
H = Hytrel® (TPEE)

Metal Pump Performance Curve

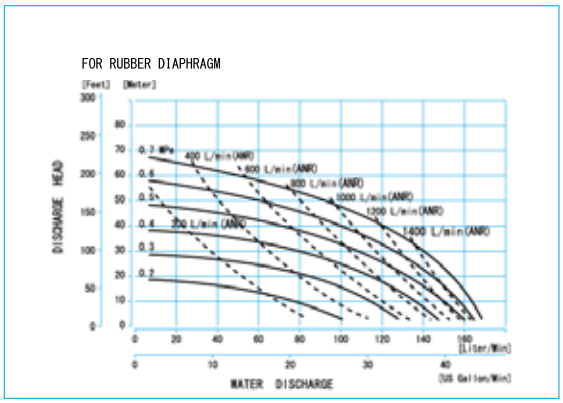

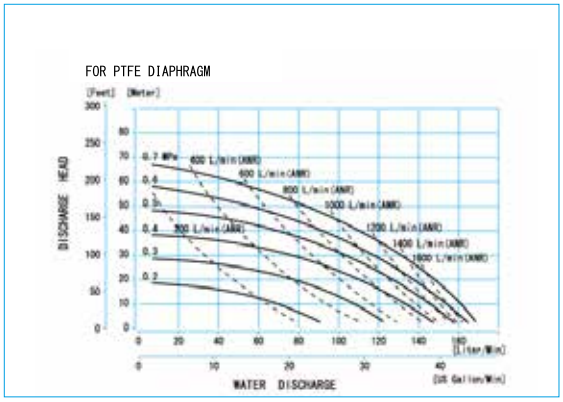

Plastic Pump Performance Curve

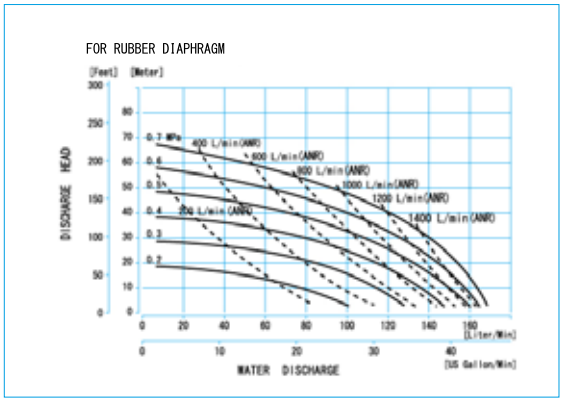

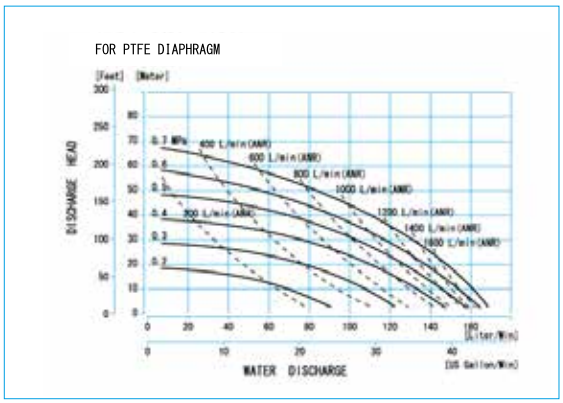

Additional options listed on page 35.

NDP-40 SERIES

Maximum Capacity 405 l/min
Port Size 1-1/2" (40 mm)

NDP-40 Groundable Kynar® (PVDF)
Dimensions:
405 mm W x 752 mm H
Net Wt.: 32,0 kg
Shipping Wt.: 40,5 kg

NDP-40 Polypropylene
Dimensions:
405 mm W x 752 mm H
Net Wt.: 27,0 kg
Shipping Wt.: 35,5 kg

NDP-40 Aluminum
Dimensions:
412 mm W x 710 mm H
Net Wt.: 29,0 kg
Shipping Wt.: 38,0 kg

NDP-40 Stainless Steel
Dimensions:
411 mm W x 705 mm H
Net Wt.: 43,0 kg
Shipping Wt.: 51,5 kg

NDP-40 Cast Iron
Dimensions:
411 mm W x 704 mm H
Net Wt.: 47,0 kg
Shipping Wt.: 55,5 kg

ANSI 150 FLANGE AVAILABLE ON POLYPROPYLENE, ALUMINUM, STAINLESS STEEL AND KYNAR PUMPS.

NDP-40 SERIES SPECIFICATIONS

Port Dimensions

Intake & discharge connection:	
Polypropylene (PPG)	1-1/2" 40 mm DN40 PN10
Groundable Kynar® (PVDF)	1-1/2" 40 mm DN40 PN10
Aluminum(ADC-12)	1-1/2" 40 mm DN40 PN10
(Combi Flange with tapped 1-1/2" 40 mm Female Rc)	
Electro-Polished Stainless Steel (316)	1-1/2" 40 mm DN40 PN10
Cast Iron	1-1/2" 40 mm Female Rc
Air inlet (incl. ball valve):	1/2" 15 mm Female Rc
Air exhaust (incl. silencer):	1" 25 mm Female Rc

Notes: Flange connections are equivalent to DN 40 PN 10 and JIS 10K 40A

Air Supply Pressure (All Models)

1,4 – 7 Bar (0,14 – 0,7 MPa)

Discharge Volume Per Cycle

Rubber diaphragm: 2,74 liters
PTFE diaphragm: 1,40 liters

Maximum Cycles Per Minute

Rubber diaphragm: 148
PTFE diaphragm: 270

Maximum Size Solid

7,0 mm (9/32")

Maximum Dry Suction Lift

Rubber-fitted pump capability: 5,5 m

Air Motor

Standard: Aluminum
Optional: Teflon®-coated, or Electroless Nickel Plate

Notes:
All Polypropylene, Aluminum, Cast Iron, and SS Hytrel® fitted pumps include Buna-N wetted o-rings.
Santoprene® fitted pumps include EPDM wetted o-rings.
Kynar® (PVDF) pumps fitted with Santoprene® include Santoprene® check balls & PTFE o-rings, Hytrel®, or Teflon® include Teflon® check balls & o-rings.

Model Number Nomenclature

NDP-40 B X X

Series:
NDP-40 pump

Valve Type:
B = Ball

Body Material:
P = Polypropylene
V = Kynar®
A = Aluminum
S = Stainless Steel
F = Cast Iron

Diaphragm Material:
C = Neoprene (CR)
N = Buna N (NBR)
E = Nordel™ (EPDM)
S = Santoprene® (TPO)
T = Teflon® (PTFE)
V = Viton® (FKM)
H = Hytrel® (TPEE)

Metal pump Performance Curve

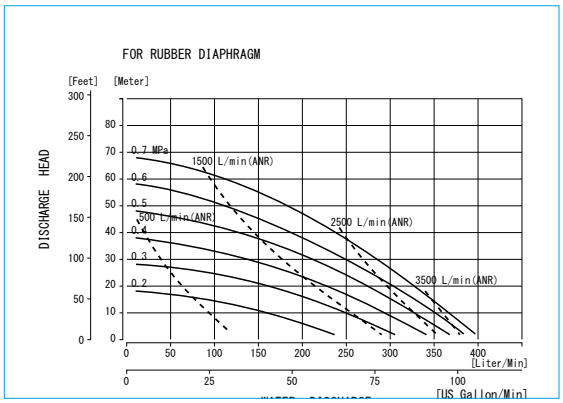

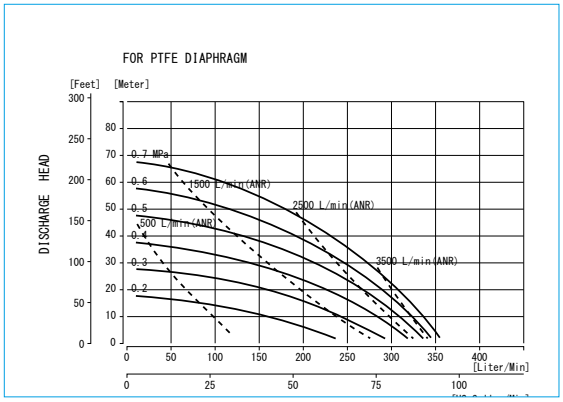

Plastic Pump Performance Curve

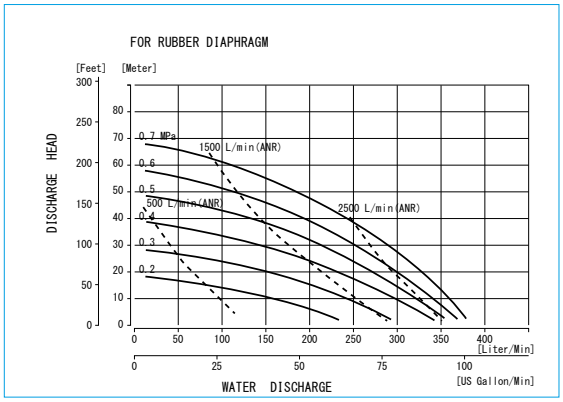

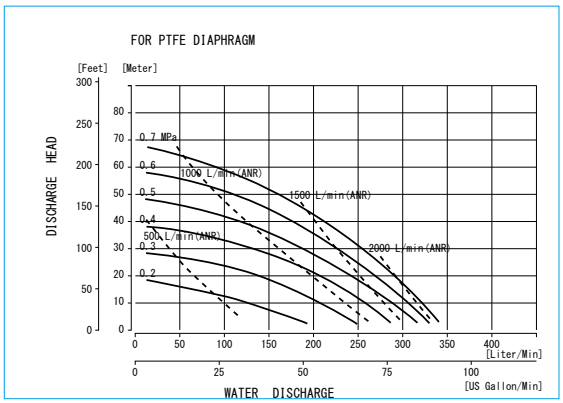

Additional options listed on page 35.

NDP-50 SERIES

Maximum Capacity 620 l/min
Port Size 2 Inch (50 mm)

NDP-50 Cast-iron
Dimensions: 450 mm W x 776 mm H
Net Wt.: 64,0 kg
Shipping Wt.: 76,0 kg

NDP-50 Aluminum
Dimensions:
452 mm W x 779 mm H
Net Wt.: 36,0 kg
Shipping Wt.: 48,0 kg

NDP-50 Stainless Steel
Dimensions:
450 mm W x 782 mm H
Net Wt.: 63,0 kg
Shipping Wt.: 75,0 kg

NDP-50 Polypropylene
Dimensions:
472 mm W x 821 mm H
Net Wt.: 37,0 kg
Shipping Wt.: 49,0 kg

NDP-50 Groundable Kynar® (PVDF)
Dimensions:
472 mm W x 821 mm H
Net Wt.: 42,0 kg
Shipping Wt.: 54,0 kg

NDP-50 SERIES SPECIFICATIONS

Port Dimensions

Intake & discharge connection:	
Polypropylene (PPG)	2" 50 mm DN50 PN10
Groundable Kynar® (PVDF)	2" 50 mm DN50 PN10
Aluminum (ADC-12)	2" 50 mm DN50 PN10
(Combi Flange with tapped 2" 50 mm Female Rc)	
Electro-Polished Stainless Steel (316)	2" 50 mm DN50 PN10
Cast Iron	2" 50 mm Female Rc
Air inlet (incl. ball valve):	3/4" 20 mm Female Rc
Air exhaust (incl. silencer):	1" 25 mm Female Rc

Notes: Flange connections are equivalent to DN 50 PN 10 and JIS 10K 50A and ANSI 150 2

Air Supply Pressure (All Models)

1,4 – 7 Bar (0,14 – 0,7 MPa)

Discharge Volume Per Cycle

Rubber diaphragm: 4,25 liters
PTFE diaphragm: 2,61 liters

Maximum Cycles Per Minute

Rubber diaphragm: 146
PTFE diaphragm: 220

Maximum Size Solid

8,0 mm (5/16")

Maximum Dry Suction Lift

Rubber-fitted pump capability: 5,8 m

Air Motor

Standard: Aluminum
Optional: Teflon®-coated, or Electroless Nickel Plate

Notes:
All Polypropylene, Aluminum, Cast Iron, and SS Hytrel® fitted pumps include Buna-N wetted o-rings.
Santoprene® fitted pumps include EPDM wetted o-rings.
Kynar® (PVDF) pumps fitted with Santoprene® include Santoprene® check balls & PTFE o-rings, Hytrel®, or Teflon® include Teflon® check balls & o-rings.

Model Number Nomenclature

NDP-50 B X X

Series:
NDP-50 pump

Valve Type:
B = Ball

Body Material:
P = Polypropylene
V = Kynar® (PVDF)
A = Aluminum
S = Stainless Steel
F = Cast Iron

Diaphragm Material:
C = Neoprene (CR)
N = Buna N (NBR)
E = Nordel™ (EPDM)
S = Santoprene® (TPO)
T = Teflon® (PTFE)
V = Viton® (FKM)
H = Hytrel® (TPEE)

Metalpump Performance Curve

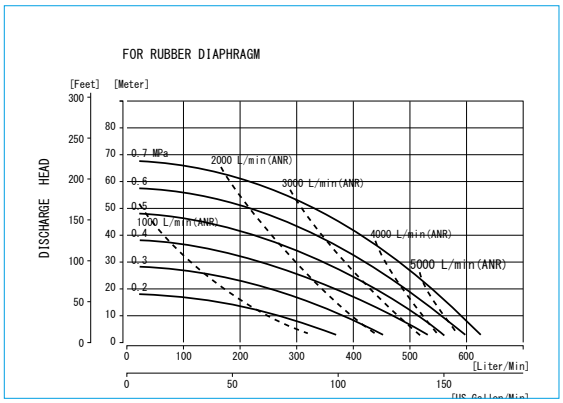

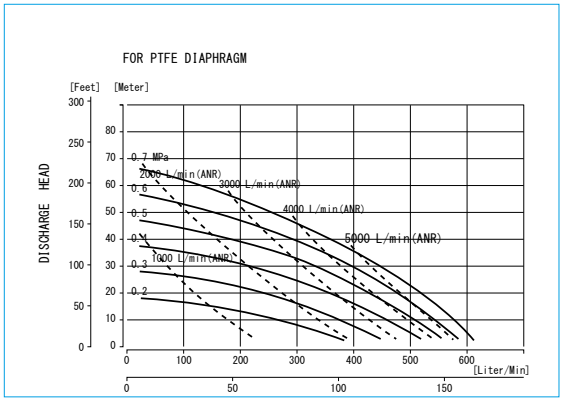

Plastic Pump Performance Curve

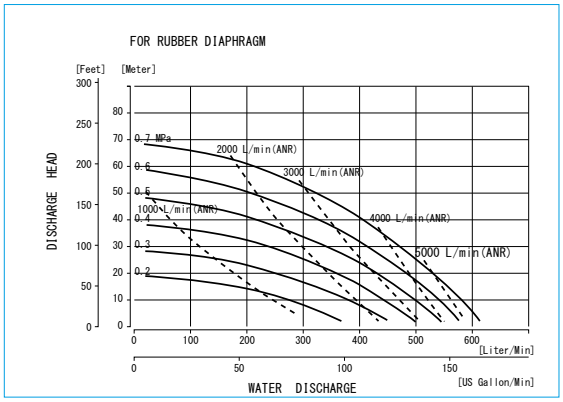

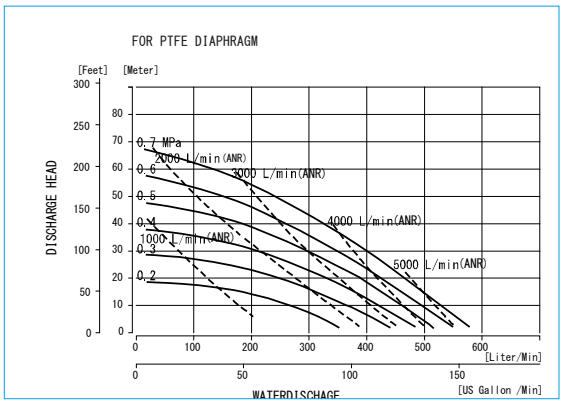

Additional options listed on page 35.

NDP-80 SERIES

Maximum Capacity 814 l/min
Port Size 3" (80 mm)

NDP-80 Stainless Steel
Dimensions: 521 mm W x 984 mm H
Net Wt.: 104,0 kg
Shipping Wt.: 119,0 kg

NDP-80 Aluminum
Dimensions:
522 mm W x 998 mm H
Net Wt.: 62,0 kg
Shipping Wt.: 77,0 kg

NDP-80 Cast Iron
Dimensions:
521 mm W x 984 mm H
Net Wt.: 110,0 kg
Shipping Wt.: 125,0 kg

NDP-80 Polypropylene
Dimensions:
580 mm W x 1044 mm H
Net Wt.: 70,0 kg
Shipping Wt.: 85,0 kg

NDP-80 SERIES SPECIFICATIONS

Port Dimensions

Intake & discharge connection:	
Polypropylene (PPG)	3" 80 mm DN 80 PN 10
Aluminum (ADC-12)	3" 80 mm DN 80 PN 10
(Combi Flange with tapped 3" 80 mm Female Rc)	
Electro-Polished Stainless Steel (316)	3" 80 mm DN 80 PN 10
Cast Iron	3" 80 mm Female Rc
Air inlet (incl. ball valve):	3/4" 20 mm Female Rc
Air exhaust (incl. silencer):	1" 25 mm Female Rc

Notes: Flange connections are equivalent to DN 80 PN 10 and JIS 10K 80A and ANSI 150 3

Air Supply Pressure (All Models)

1,4 – 7 Bar (0,14 – 0,7 MPa)

Discharge Volume Per Cycle

Rubber diaphragm: 8,57 liters
PTFE diaphragm: 3,8 liters

Maximum Cycles Per Minute

Rubber diaphragm: 95
PTFE diaphragm: 160

Maximum Size Solid

10,0 mm (13/32")

Maximum Dry Suction Lift

Rubber-fitted pump capability: 5,8 m

Air Motor

Standard: Aluminum
Optional: Teflon®-coated, or Electroless Nickel Plate

Notes:
All Polypropylene, Aluminum, Cast Iron, and SS Hytrel® fitted pumps include Buna-N wetted o-rings.
Santoprene® fitted pumps include EPDM wetted o-rings.

Model Number Nomenclature

NDP-80 B X X

Series:
NDP-80 pump

Valve Type:
B = Ball

Body Material:
P = Polypropylene
A = Aluminum
S = Stainless Steel
F = Cast Iron

Diaphragm Material:
C = Neoprene (CR)
N = Buna N (NBR)
E = Nordel™ (EPDM)
S = Santoprene® (TPO)
T = Teflon® (PTFE)
V = Viton® (FKM)
H = Hytrel® (TPEE)

Metal Pump Performance Curve

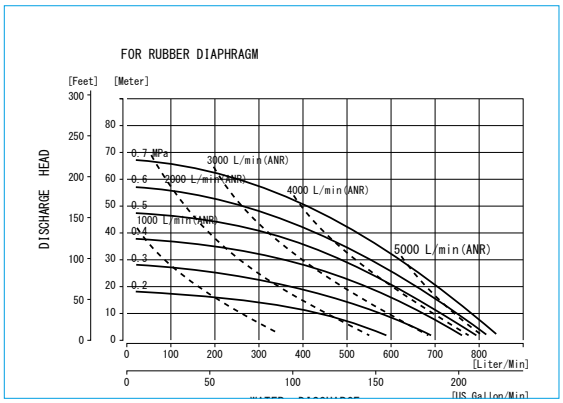

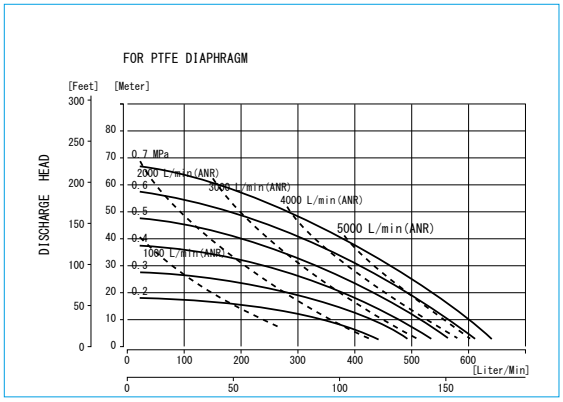

Plastic Pump Performance Curve

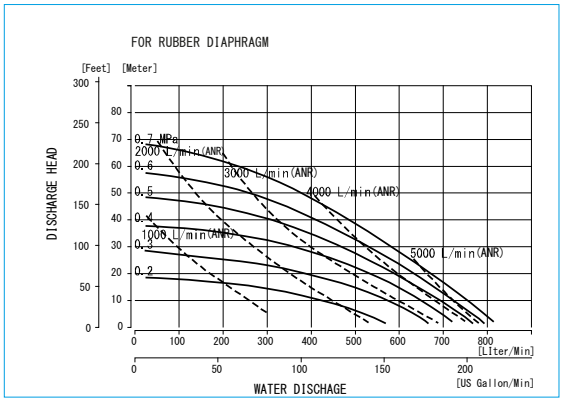

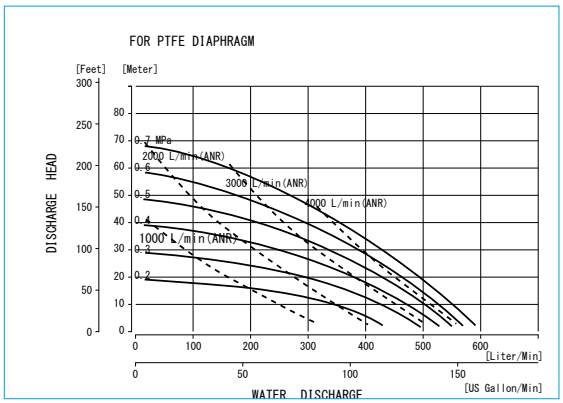

Additional options listed on page 35.

DIMENSIONAL DRAWINGS

DP-10, NDP-5, NDP-10, NDP-15, NDP-20
and NDP-25 Series

NDP-5FAT

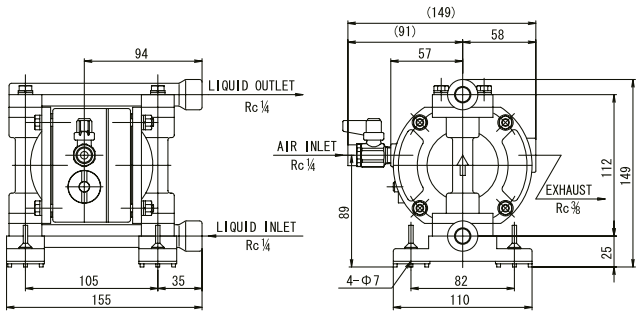

NDP-5FST

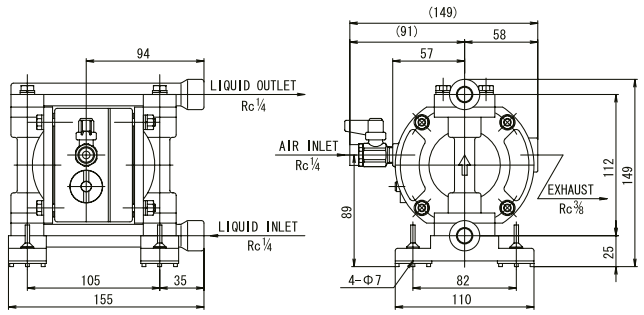

NDP-5FPT-FVT-FDT

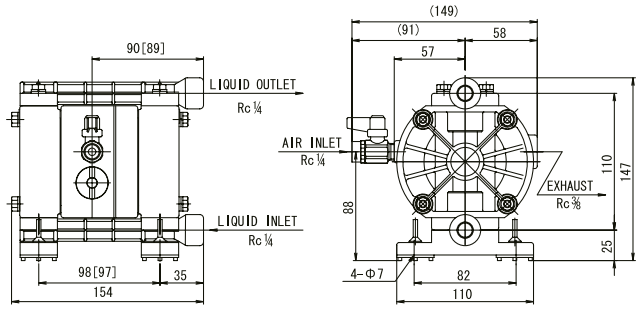

DP-10BA

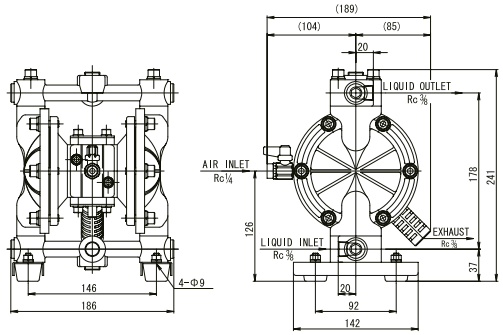

DP-10BS

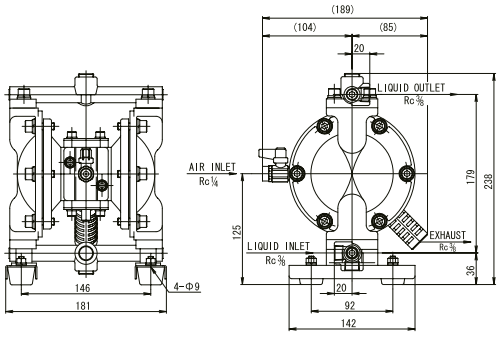

DP-10BP

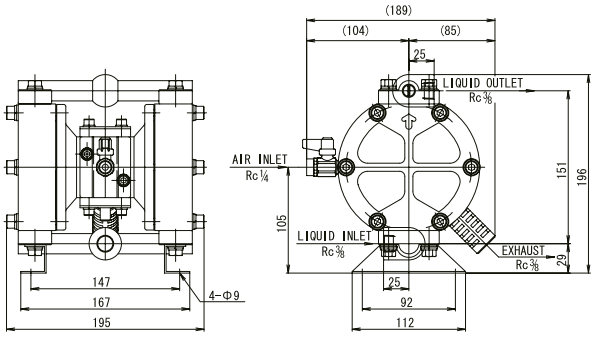

NDP-10BP

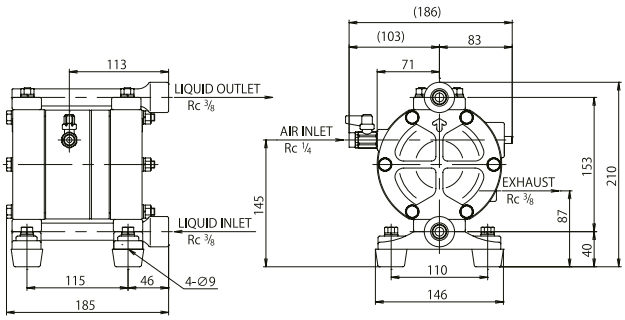

NDP-15BA

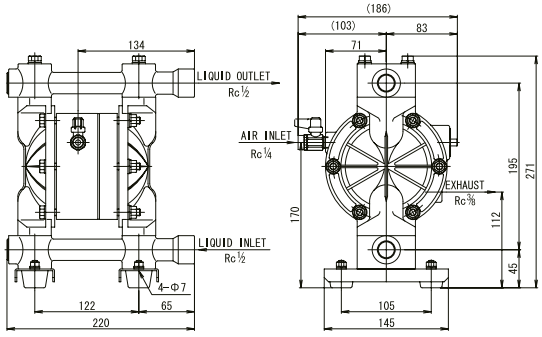

NDP-15BS

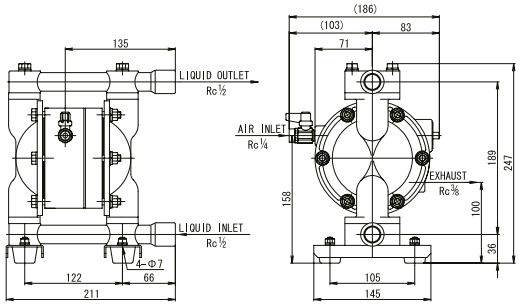

NDP-15FP-FVT-FDT

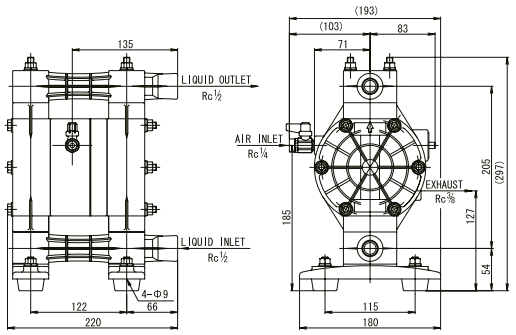

NDP-20BA

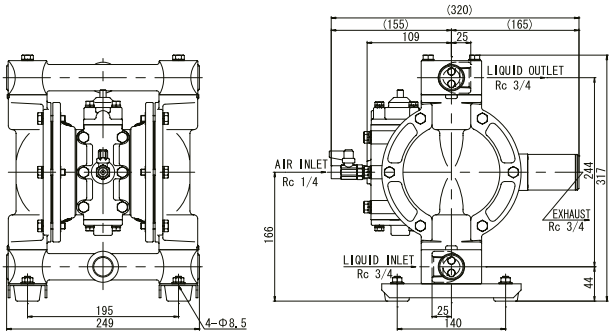

NDP-20BS

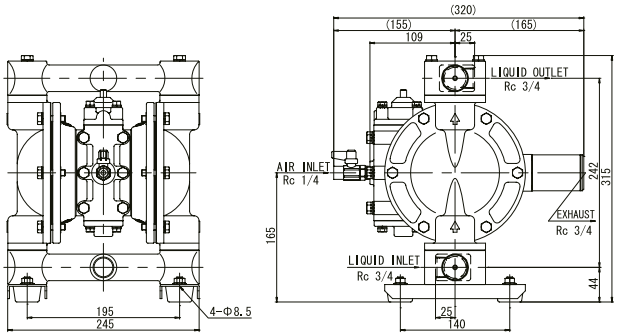

NDP-20BP

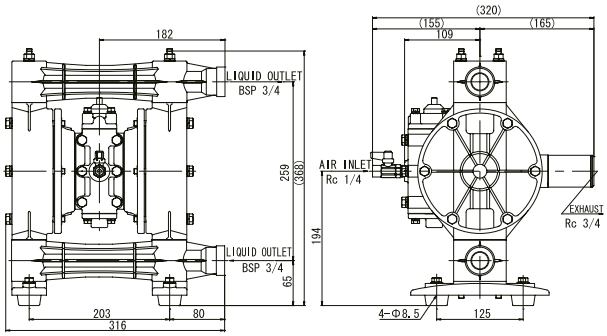

NDP-20BP-FL

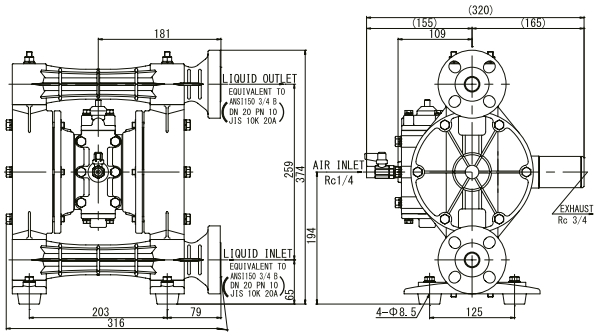

NDP-25BA

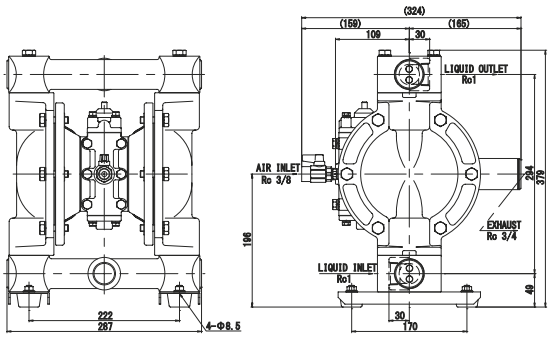

NDP-25BF

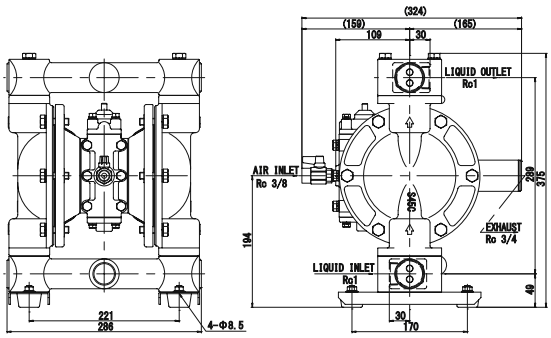

NDP-25BS

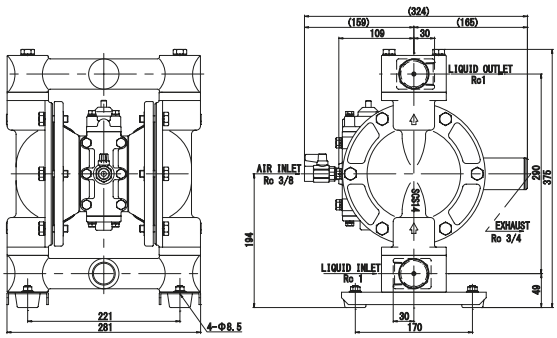

NDP-25BP

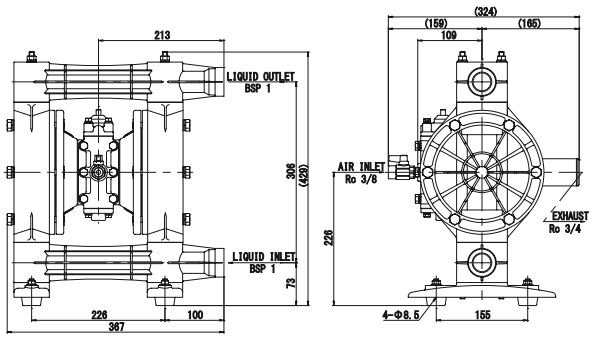

DIMENSIONAL DRAWINGS

NDP-25, NDP-32, NDP-40, NDP-50
and NDP-80 Series

NDP-25BP-FL

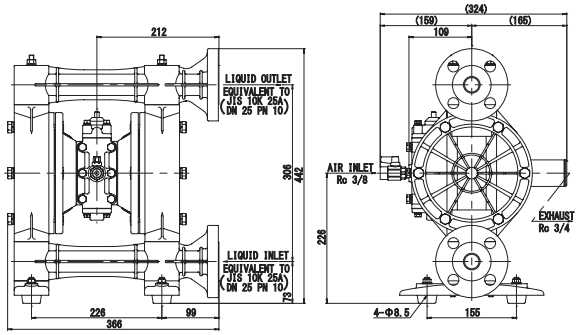

NDP-25BV

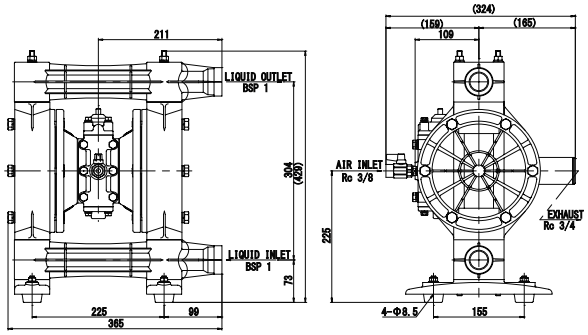

NDP-25BV-FL

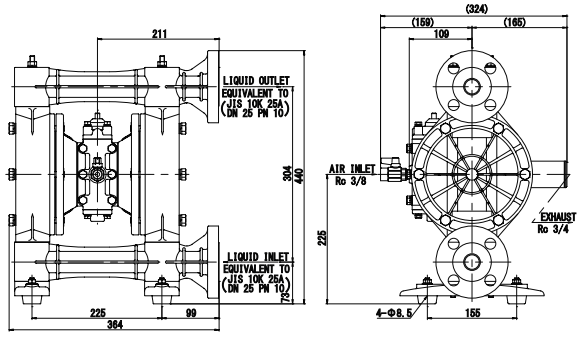

NDP-32BA

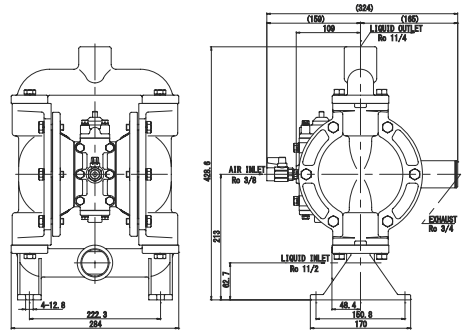

NDP-40BA

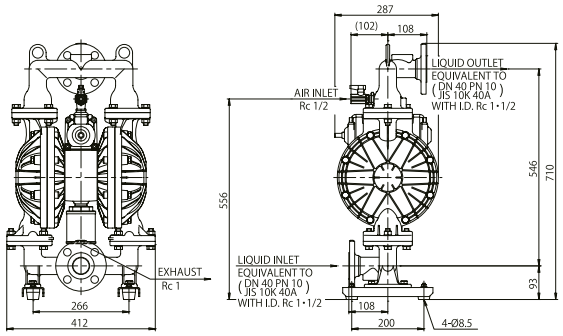

NDP-40BF

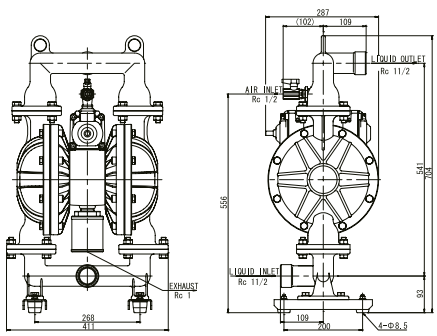

NDP-40BS

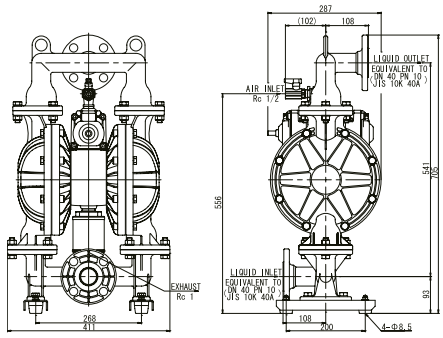

NDP-40BP

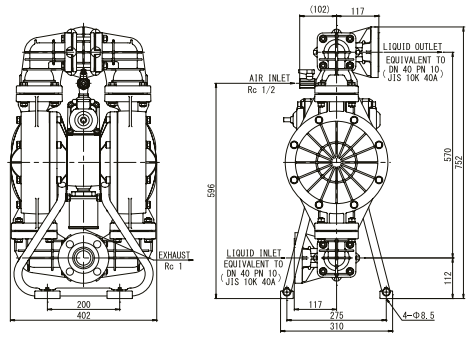

NDP-40BV

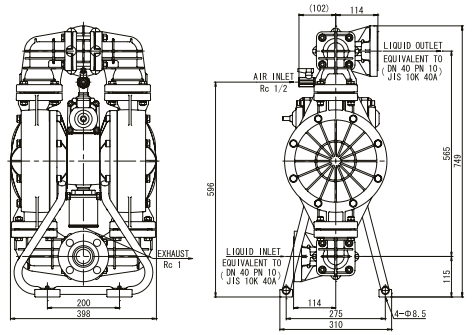

NDP-50BA

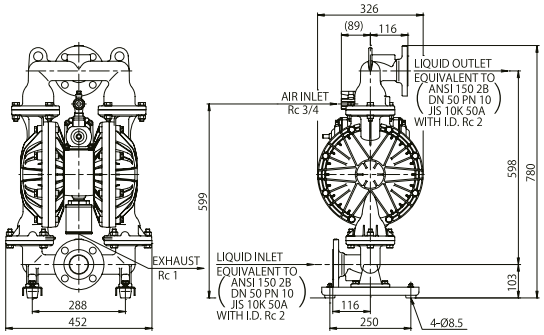

NDP-50BF

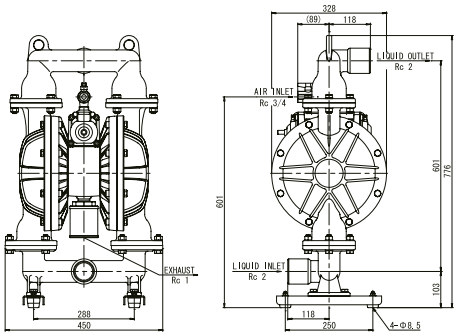

NDP-50BS

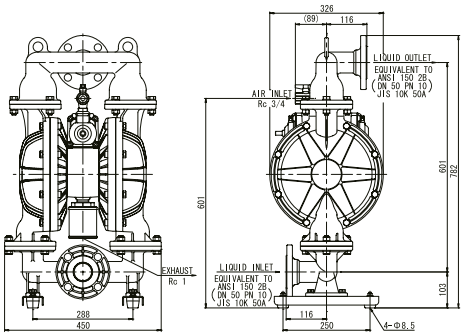

NDP-50BP

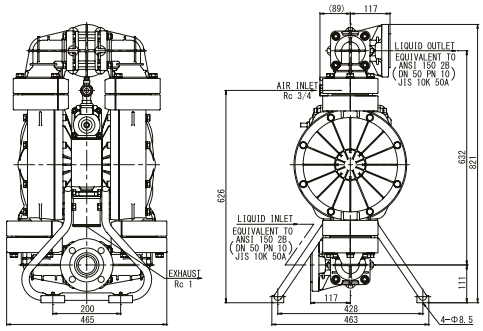

NDP-50BV

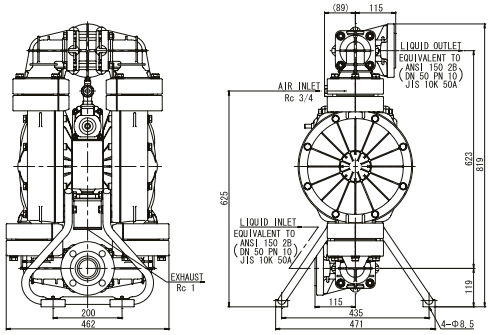

NDP-80BA

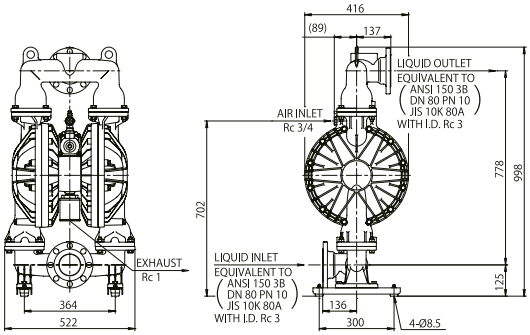

NDP-80BF

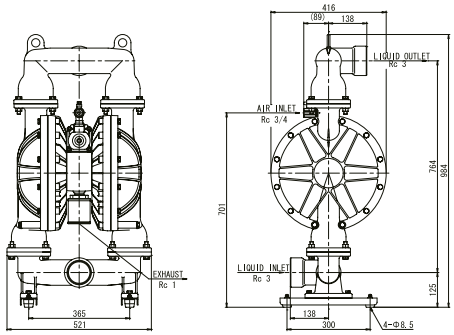

NDP-80BS

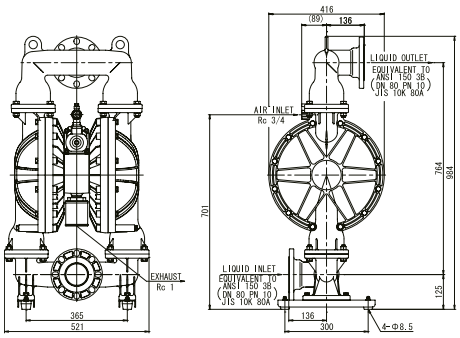

NDP-80BP

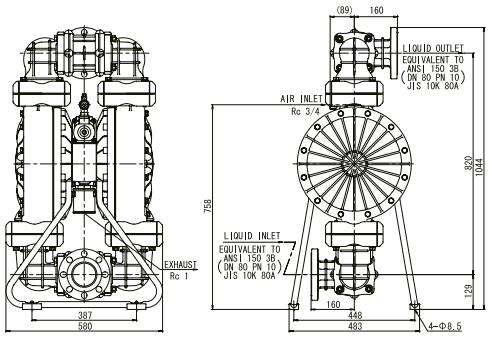

Model NDP-40 HP

Model NDP-25 HP

HIGH PRESSURE 2:1

2:1 Ratio High Pressure Pumps are designed for applications when a maximum 7 Bar operating pressure is insufficient to overcome system requirements.
The flow rate is roughly half of the equivalent size pump output, though a maximum discharge pressure of 13 Bar can be achieved with only 7 Bar air inlet pressure supplied. The 2:1 discharge ratio is achieved by applying air pressure to the surface area of both diaphragms, doubling the discharge output.

Port sizes: 3/4"–3"	Capacity: 1 to 378 l/min
Construction	Stainless Steel, Cast Iron or Aluminum wetted materials

Controls: No elaborate bypass, relief valves, or complicated controls required. Excellent pressure retention.

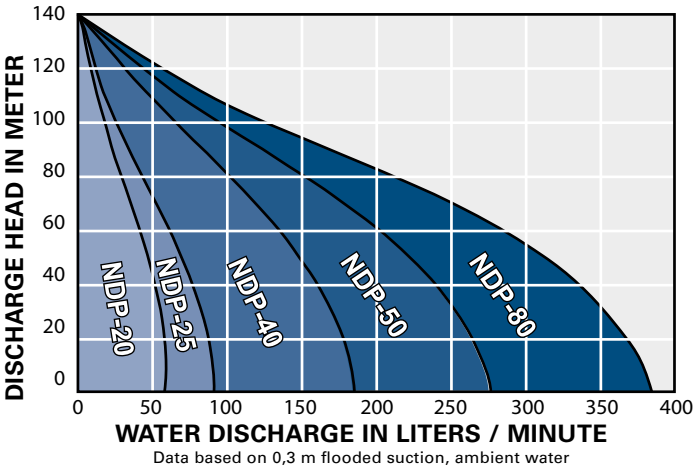

Model NDP15BP-MPZ

Model NDP-15FP-Z

Model NDP-5FPT-Z

MANIFOLD OPTIONS

Many Yamada pumps come with a variety of multi manifold options offering the user various process solutions. Some options available are 2 in 1 out, 2 in 2 out, 1 in 2 out, vertical middle or side inlets etc. For more information on manifold options please contact Yamada or your local distributor.

Port sizes	1/4", 3/8", 1/2", 3/4", and 1"
Construction	Polypropylene, Aluminum, or Stainless Steel
Modes of operation	Dual suction with dual or single discharge single suction with dual discharge

Also mid connection is available for PPG 5 and 15 pumps.
Additional options listed on page 32.

Optional:
1" Rc inlet & outlet side ports. Available for aluminum pumps only.

XDP Series Pump

XDP SERIES

The Xtreme Duty Pro™ XDP is designed for use in process type applications including filter press, high pressure, extended deadheading, long runs of discharge pipe and where air consumption is critical.

Air power is conserved by actuating the air valve using a mechanical linkage instead of relying on air pressure. Air power is reduced by 20% vs. A standard air-actuated valve providing more pressure to drive the diaphragm assembly.

Available in 1-1/2", 2" and 3" port sizes, these pumps are built on the liquid platform of a standard NDP Series pump, but with the world's only mechanically-actuated air motor.

Xtreme Duty Pro™ XDP pumps are capable of running on air pressure equivalents as high as 9 Bar or as low as 0,4 Bar and provide the same liquid side performance as the NDP Series pumps.

For additional information, product literature, and drawings please visit www.yamada-europe.com or contact your local Yamada distributor.

Model NDP-80BA-BH-3

Model NDP-50BA-BH-2

POWDER PUMPS

Yamada Powder Pumps are designed to move bulk powders more effectively throughout your process vs. other unsafe and labor intensive means. These heavy duty pumps will consistently transfer fine-grained, low-bulk density dry powders in a dust-free operation.

Port sizes	1-1/2", 2", or 3"
Construction	Aluminum, Cast Iron, or Stainless Steel

Three series of pumps are offered.

Series BH-1
- Vacuum Activated Aeration Valve mounted to suction manifold.

Series BH-2
- Includes all features of the BH-1. Compressed air induction system fluidizes all four check valves while the pump is operating.

Series BH-3
- Includes all features of the BH-1 and BH2.
- Independent port for inert gas fluidization rather than compressed air.
- Delay timer to begin fluidizing check valves 1-60 seconds prior to the pump starting and 1-60 seconds after the pump stops.

Drum Pumps
3/8", 1/2", & 3/4" Port Sizes

FDA-Compliant Drum Pumps are available. Please consult the factory for details.

DRUM PUMPS

Yamada AODD Pumps have distinct design advantages, making them versatile and cost effective drum pumps.

Models are available in Polypropylene, PVDF (Kynar®), Aluminum, and Stainless Steel.

Drum pumps are available in 3/8", 1/2", and 3/4" port sizes. (3/8" metal only & 1/2" plastic only) with flow rates up to 105 l/min.

Refer to DP-10, NDP-15 & NDP-20 technical information for additional performance data. Use applicable NDP nomenclature adding a "D" at the end of the model number. Other sizes and materials are available, consult Yamada.

Port Dimensions

Intake & discharge connection:	
Aluminum (ADC-12) Includes Aluminum Male Rc Bung adapter and suction pipe	3/8" or 3/4" Female Rc
Stainless Steel (316) Includes Stainless Steel Male Rc Bung adapter and suction pipe	3/8" or 3/4" Female Rc
Polypropylene (PPG) Includes PVC suction pipe, elbow, & Bung adapter (PPG also avail.)	1/2" or 3/4" Female Rc
Note: Yamada recommends utilizing flat-type check valves for the NDP-15 series polypropylene pumps.	
Kynar® (PVDF) Includes PVDF suction pipe, elbow, and Bung adapter	1/2" Female Rc
Drum inlet connection	2" Bung

NDP-32BAN

NDP-32 SERIE

The NDP-32 series is a compact, lightweight and easily portable pump with a 1-1/2" liquid inlet and a 1-1/4" vertical outlet. This model corresponds in both footprint dimensions, body size and outlet positions to many pumps used in the marine, oil & gas and mining applications throughout the world. This size pump is often used for waste water or sump / mine dewatering applications and has the ability to pump solid laden slurry solutions. The body is in aluminium with Buna-N diaphragms however can also be prepared with other materials if required. Due to the dimensional standardization it is possible to carryout hard piped pump changeovers without having to modify the piping or system configuration.

Pump model is available in aluminum

Inlet 1-1/2" NPT Outlet 1-1/4" NPT

Air supply pressure 1,4 – 7 Bar

FDA Compliant
316 Stainless Steel

FDA COMPLIANT PUMPS

Yamada FDA compliant pumps are specifically designed for Food, Pharmaceutical & Cosmetic industries where 3A or USDA standards are not required.
Pumps include 316 Stainless Steel wetted components with passivated satin finish, teflon air motor, sanitary tri-clamp fittings, and FDA compliant elastomers: Hytrel®, EPDM and PTFE.

Eight sizes from 3/4" to 4" ports

Flow ranges from 1 - 800 l/min

Air pressures ranging from 1,5 to 7 Bar.

Air motor:		
Aluminum Epoxy®-coated	DP-10, NDP-40/50/80	
Ryton		NDP-5-15
Polypropylene (PPG)		NDP-20/25
Finish	Interior mechanical polish available on most models. Consult Yamada	

Note:
FDA Series pumps are constructed with oversized sanitary ports.

ELECTRICAL CONTROLLED SERIES DM(B)(X)

Accurate flow control and measurement options. Less parts and extended life expectancy of moving parts including diaphragms. Low pressure movement (from 0,7Bar) is possible in some cases. Unmatched start stop reliability, remote monitoring and control. Variable pump speed control. And many more.

Yamada's range of electrical controlled pumps with direct mounted 5/3 solenoid valves 24V DC are specially designed for process applications which require metering, batching or variable of constant flow control.These pumps offer extreme operation reliability, parts life time and a perfect balanced energy consumption. They are well suited to intense process applications. All DM(B)(X) pumps are operated through a locally positioned or remote PLC device (sold separately) and are available beside standard also as ATEX (X) approved in combination with the conductive pump materials such as metals, Kynar (PVDF) or Acetal.

DM(X) Series

Up till the NDP series 25, Yamada offers standard a DMB motor. The motor is specially prepared for direct mounting of the solenoid valves. The motors of NDP-5, 10 and 15 are made of a conductive plastic, which means they are suitable for an ATEX environment in combination with ATEX coils. For series 20, 23, 25 and 32 Yamada offers an aluminum DMB motor which of course can be protected with the well known high quality PTFE coating Yamada offers.

For series DP-10 and NDP-40, 50 and 80 we use special adaptor plates to mount the 5/3 solenoids, replacing the standard pneumatic valve house.

Al pumps can be combined with a sensor for center rod movement detection, stroke or cycle counting , sensor shifting or in extreme situations for calibration. With cycle length calibration a PLC is able to use just a certain percentage of the cycle movement for fine dosing.

For more information, please contact Yamada or your local distributor.

NDP-50FAN

SOLIDS HANDLING PUMP

Flap Valve Pump designed to pump large solids

The New Yamada Flap Valve Pump was designed and engineered to address the problems normally associated with flap valve pumps. I.e. Normally due to severe working conditions, there is often a need to remove a pump from service for repairs, cleaning or parts changeovers.

Based on Yamada field proven NDP series foundation, this pump has all of the features and benefits associated with every Yamada pump.

Ingenious Flap Valve design allows for passage of large solids up to 50 mm

Easy access to valve chambers allows easy maintenance when you need it most without the need to remove the pump from service.

Vented diaphragm chambers serve to alleviate problems associated with trapped air/gas.

Repair/clean in place design

Only 4 bolts to access flap valves

FEATURES AND BENEFITS

- Repair/clean in place design enables quick servicing of pump
- Up to 50 mm solids handling
- Vent ports to alleviate build-up of air/gas in liquid chamber
- Quick removable flap valves
- Top suction, bottom discharge design will not allow solids to settle in pump.
- Fully non lubricated Air-Valve
- Fully bolted construction
- Short stroke design to help improve diaphragm life.
- Outside-Accessible Air Valve
- Modular Pilot valve design
- No dynamic O-rings to replace or repair.

Modular Heavy Duty Flap Check Valves

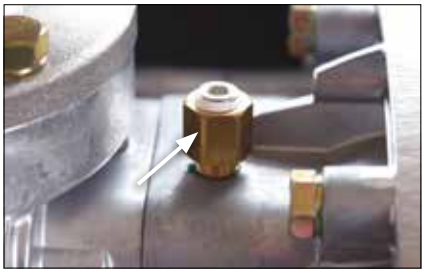

Vent ports to alleviate vapour lock and help with priming

LIQUID LEVEL CONTROLLER

The Yamada LLC-2Y Liquid Level Controller is a totally pneumatic system designed to automatically start and stop Yamada Air-Powered Double Diaphragm Pumps when the liquid level within a tank, sump, etc. reaches predetermined levels.

An extremely versatile controller, the LLC-2Y can be used in both single and dual pump applications with any size or model Yamada pump. Used in a single pump configuration, it automatically controls either the filling or emptying of a tank or other vessel. When connected to two separate pumps, it will control both the filling and emptying of the tank. This dual pump capability is particularly useful for waste water storage, contaminated water clean up, and other applications where liquids are regularly transferred into and out of a single vessel.

The LLC-2Y consists of a sophisticated air logic control valve housed in an impact-resistant fiberglass reinforced plastic enclosure. As the liquid level within the tank rises or falls, the subtle changes in pressure are transmitted through high and low level dip tubes to the air logic control valve. When the liquid level reaches a predetermined level (tubing is cut in the field to the preferred HIGH and LOW level points), the power valve supplying air pressure to the pump is turned ON or OFF as required.

The LLC-2Y is capable of maintaining liquid levels in virtually any unpressurized vessel. Its liquid level control span ranges from a few inches to dozens of feet. For added convenience, it may be mounted up to 6 meter away from the pump.

DRY-RUN DETECTION

DRD-100 Dry-Run Detector

The Yamada DRD-100 detects increases in air volume due to loss of prime or dry-running, and automatically shuts down the pump to prevent excess cycling and increased diaphragm wear.

- Extends life of diaphragm
- Eliminate air consumption in dry run applications
- Prevents air valve from premature failure
- Intrinsically safe operation
- Supports remote warning systems

Model AD-10

Model AD-25

Model AD-40

Model AD-50

PULSATION DAMPENERS

AD Series

Metering/Injection/Dosing
Equalizes discharge pressure spikes, increasing accuracy.

Filter Press/Inline Filters
Increases filter efficiency and life by providing a smooth flow.
Spraying: Smooth, consistent spray pattern.

Filling
Eliminates inconsistent filling and splashing.

Transfer
Eliminates harmful water hammer, preventing pipe and valve damage. Yamada Pulsation Dampeners incorporate a flow-through design which keeps solids in suspension, maintaining dampener effectiveness.

A completely automatic air motor self-relieves if reduction of discharge head condition occurs.

Dampener Model	Fits Pump Models
AD-10	NDP-5, DP-10/15, & NDP-15
AD-25	NDP-20 & NDP-25
AD-40	NDP-40
AD-50	NDP-50 & NDP-80

Dampener Model	Connections
AD-10	3/8" Rc port
AD-25	1" Rc port
AD-40	1-1/2" Rc port
AD-50	2" Rc port

Material

Aluminum (ADC-12)	All models
Stainless Steel (316)	All models
Cast Iron	AD-25, AD-40, & AD-50
Polypropylene (PPG)	All models
Kynar® (PVDF)	AD-25 & AD-50

Diaphragm
Choice of seven elastomers:
Santoprene®, Hytrel®, Buna N, EPDM, Neoprene, Viton® & PTFE

Air Side Coating Options
Teflon®, or Electroless-Nickel plate air-side

For additional information, product literature, please visit www.yamada-europe.com or contact your local Yamada distributor.

Without Pulsation Dampeners

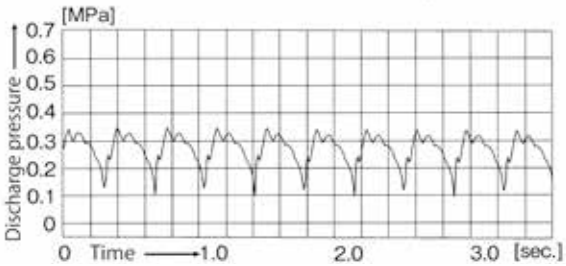

With Pulsation Dampeners

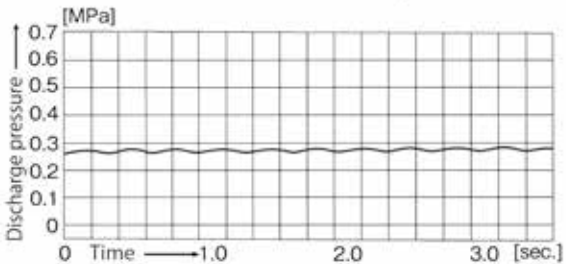

Rubber Compounds

Neoprene (CR)
Excellent for non-corrosive abrasive applications.
Identification: dull black with no color dot
Temperature range: -18°C to 82°C

Buna-N (NBR)
Excellent for petroleum based fluids.
Identification: black with a red or pink dot
Temperature range: -12°C to 82°C

Nordel™ (EPDM)
Excellent for low temperatures, caustics and some acids.
FDA Compliant EPDM Material (must be specified).
Identification: black with green dot
Temperature range: -40°C to 100°C

Viton® (FKM)
Excellent for aggressive fluids and high temperature applications.
Identification: black with silver or blue dot
Temperature range: -29°C to 120°C

PUMP DIAPHRAGMS

What to consider when selecting the proper diaphragm material

- Chemical resistance
- Estimated flex life
- Temperature limitations
- Abrasion resistance
- Cost

Thermoplastic Compounds

Hytrel® (TPEE)
Excellent general-purpose diaphragm for non-corrosive abrasive applications and high-flex life. FDA compliant material.
Identification: Tan/Cream Thermoplastic
Temperature Range: -18°C to 120°C

Santoprene® (TPO)
Excellent for acids or caustics with a very high flex life.
Identification: Black Thermoplastic
Temperature Range: -23°C to 100°C

Teflon® (PTFE)
Excellent choice for pumping highly aggressive fluids, including solvents.
Identification: White Thermoplastic
Temperature Range: 4,5°C to 100°C

Bonded Diaphragms

TU® (PTFE with EPDM backing)
This so called high performance easy clean PTFE diaphragm has earned its reputation already in the ink, paint and printing industry for more than 10 years. In this 24/7 industry the diaphragm has proven its reliability. This high flexible PTFE diaphragm has at least a 3 times better estimated life time compared to standard PTFE diaphragms. Standard diaphragms have thread, nuts and center disks inside the liquid area. The TU diaphragm has a rod connection only at the air side and an easy to clean liquid surface. This means no ink or paint residue will accumulate behind bolts, center disks etc. which prevents color contamination.

* Please note that excessive inlet pressure or excessive suction lift can shorten diaphragm life. Please consult Yamada for further information.

MAXIMUM LIQUID TEMPERATURE

Fitted with Teflon® (PTFE) diaphragm

Pump Material	Temperature
Polypropylene (PPG)	82°C (180°F)
Groundable Kynar® (PVDF)	100°C (212°F)
Groundable Acetal (POM)	82°C (180°F)
Aluminum (ADC-12)	100°C (212°F)
Stainless Steel (316)	100°C (212°F)

Diaphragm Material	Temperature
Neoprene (CR)	82°C (180°F)
Buna N (NBR)	82°C (180°F)
Nordel™ (EPDM)	100°C (212°F)
Hytrel® (TPEE)	120°C (248°F)
Santoprene® (TPO)	100°C (212°F)
Viton® fluoroelastomer (FKM)	120°C (248°F)
Teflon® (PTFE)	100°C (212°F)

* The maximum liquid temperature for metal and Kynar®-fitted pumps is determined by the elastomer (diaphragm material). Polypropylene pumps have a maximum liquid temperature of 82°C (180°F) regardless of diaphragm material.

Teflon® Coating

Electroless-Nickel Plating

OPTIONAL COATINGS ALUMINIUM AIR MOTORS

Teflon® coating and Electroless-Nickel plating is available for Yamada pumps for two primary reasons:
Environment: Pump installation in a chemically aggressive location where material or fumes not compatible with Aluminum may contact the air motor; or
Diaphragm Failure: If properly selected, the coating or plating will defend the major Aluminum air valve components from the fluid being pumped. For internal and external protection, the four major air motor components are independently coated or plated then assembled.

IDEAL AIR-POWERED DOUBLE DIAPHRAGM PUMP INSTALLATION

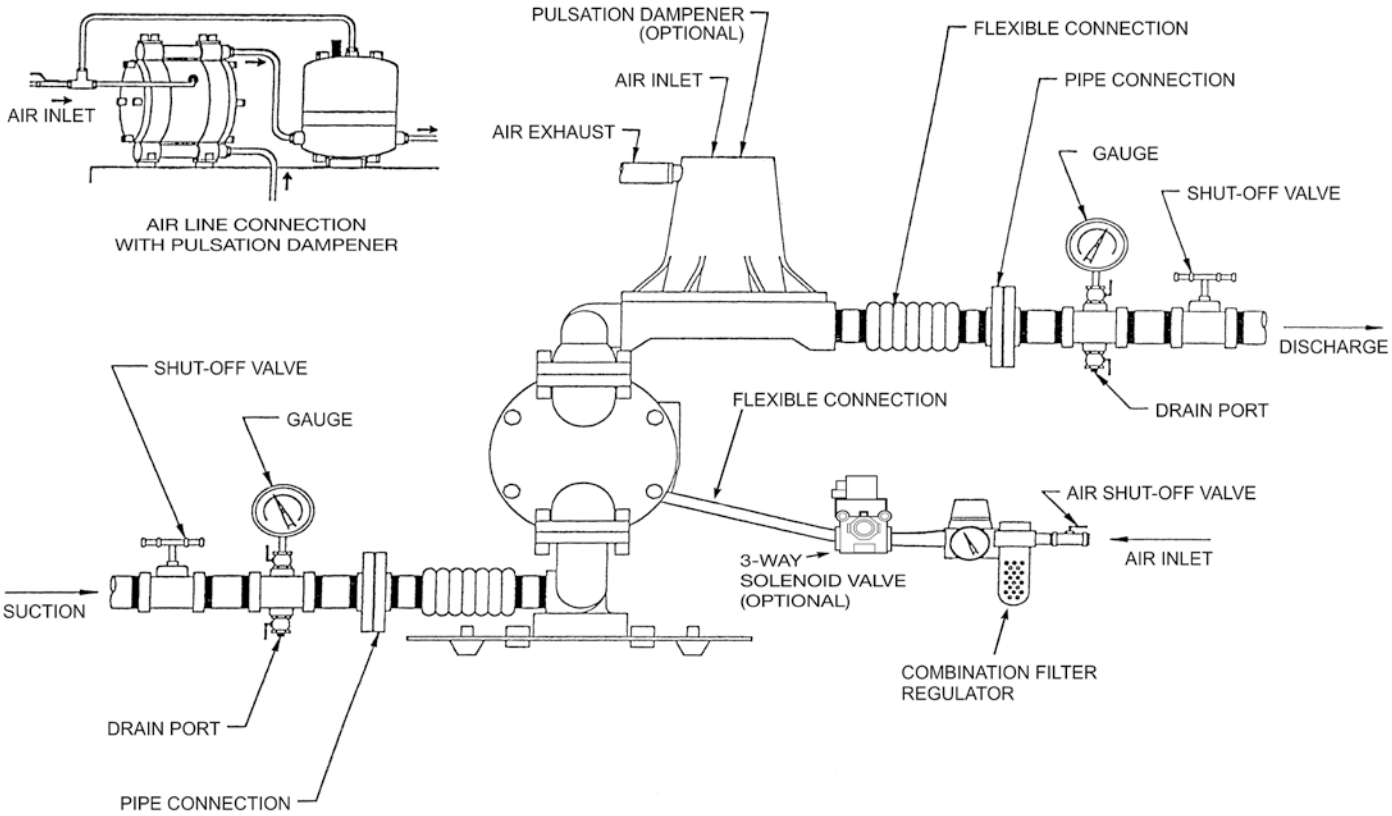

ADDITIONAL OPTIONS

Model Number Nomenclature

XXX XX X X X X X X

- PUMP SERIES; NDP / DP
- CONNECTION SIZE
- CHECK VALVE TYPE
- BODY MATERIAL
- DIAPHRAGM MATERIAL
- STANDARD OPTIONS PP-MOTOR, HD, ETC

Optional Ball Valve / Seat Materials

C:	Neoprene (CR)
NBR:	Buna N (NBR)
E:	Nordel™(EPDM)
T:	Teflon® (PTFE)
V:	Viton® (FKM)
S:	Santoprene® (TPO)
S1:	316 SS Ball
S2:	316 SS Seat (Machined)
S3:	316 SS Ball Guide
SS:	316 SS Ball & Seat

C: NEOPRENE
E: EPDM
N: NBR
H: HYTREL
S: SANTROPENE
T: PTFE
TU: PTFE/EPDM
V: VITON

A: ALUMINIUM
S: SS316
F: CAST IRON
P: PPG
V: PVDF
T: PTFE

B: BALL VALVE
F: FLAT VALVE 5 AND 15 PLASTIC SERIES
F: FLAP VALVE 50 FAN SERIES

5:	1/4"	12 l/min
10:	3/8"	22 l/min
15:	1/2"	51 l/min
20:	3/4"	120 l/min
25:	1"	170 l/min
40:	1,5"	405 l/min
50:	2"	620 l/min
80:	3"	814 l/min

To properly specify a Yamada Pump, the following information is required.

- Material to be pumped (viscosity and specific gravity)
- Pumping temperature (°C or °F)
- Capacity and operating condition
- Discharge pressure (Bar, PSI)
- Corrosive and/or abrasive?
- Suction line details
- Available air supply

A complete specification form and pump selector is available.

Yamada®, SolidPRO®, Xtreme Duty Pro™ XDP are registered trademarks of Yamada America, Inc
Hytrel® & Teflon® are a registered trademarks of E.I. du Pont de Nemours and Company.
Kynar® is a registered trademark of Arkema.
Nordel™is a registered trademark of Dupont Dow Elastomers.
Ryton® is a registered trademark of Chevron Phillips ChemicalCompany.
Santoprene® is a registered trademark of Monsanto Co.
Viton® is a registered trademark of Dupont Performance Elastomers

Additional Options

Connection Options

I:	Split Suction Manifold	
O:	Split Discharge Manifold	
Z:	Both Manifolds Split	
MPI:	Mid Suction Manifold	PPG 5/15
MPO:	Mid Discharge Manifold	PPG 5/15
MPZ:	Both Manifolds Mid	PPG 5/15
FLG:	Flanged Manifold	
NPT:	NPT Female Thread	
RC:	BSPT Female Tread inside alu manifolds 40/50/80 series	
CR:	BSPT Flange Adapter 40/50/80	

Air Motor Options

PP:	Polypropylene Motor Size 20/25
X2:	Nickel Plated Motor
XS:	PTFE Coated Motor
XDP:	Xtreme Duty Pro Motor (40/50/80)

Electric Control Options

P2:	Proximity Sensor 24 – 240 VAC
PX:	Proximity Sensor ATEX (till NDP-25)
DM:	Direct Mount Solenoid Valve
DMX:	Direct Mount Solenoid Valve ATEX
DMB:	Direct Mount Body (Only 20/25)
DMBX:	Direct Mount Body ATEX (Only 20/25)
RM:	Solenoid Valve On/Off
RMX:	Solenoid Valve ATEX On/Off
Q:	Diaphragm Rupture / Leak Sensor Kit

Special Pumps

A:	ATEX Pumps
BH-1:	Powder Pump Series 1
BH-2:	Powder Pump Series 2
BH-3:	Powder Pump Series 3
HP:	2:1 High Pressure Pump, Metal Only
D:	Drum Pump (10/15/20 Series)
FDA:	FDA Compliant
EP–20RA:	20RA Electro Polished Finish (Only 05/10/15/20.25 SS)

Specific options

1:	PTFE O-rings
1S:	1" Side Connection Alu 20
BXD:	Bearing Xtreme Duty 20/25
XPS:	Xtreme Perf. Spool Series 20/25
P:	Reinforced centre parts powder series

Accessories

U:	High Performance Muffler
J:	Speed Control Muffler
L:	Destroke NDP-20 Through NDP-80
K:	316 SS Pilot Valve Seats (20/25 Series)
AP:	Abrasion Pad

Due to Dutch, European and international trade laws, Yamada-products may require licensing prior to export or re-export. We request that when dealing with Yamada-products that you take the utmost care in ensuring that all required legal procedures are carried out correctly.

Your Local Distributor/Sales & Service Centre:

Ref NR.: EN0518

Yamada Europe B.V.

Aquamarijnstraat 50 • 7554 NS Hengelo (OV) • The Netherlands

Phone: +31 (0)74-242 2032 • E-mail: sales@yamada-europe.com